Bio-Corridor Infrastructure
Construction Plans for
Lift Station, Force Main and Gravity Sewer

LIFT STATION, FORCE MAIN AND GRAVITY SEWER

CITY OF COLLEGE STATION
Home of Texas A&M University

CITY OFFICIALS:

MAYOR:	Nancy Berry
CITY COUNCIL:	Blanche Brick Jess Fields Karl Mooney John Nichols Julie Schultz James Benham
PUBLIC WORKS DIRECTOR:	Charles Gilman, Jr., P.E.
CITY ENGINEER:	Alan Gibbs, PE
CITY ATTORNEY:	Carla Robinson

LOCATION MAP:

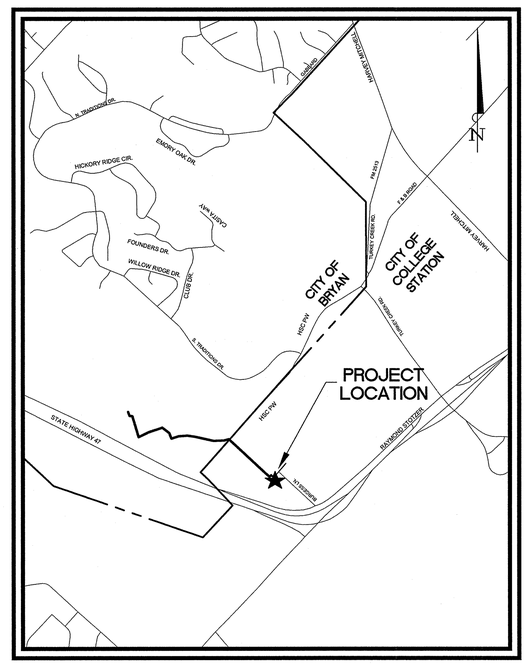

CITY OF BRYAN
VICINITY MAP
N.T.S.

CITY OF BRYAN
The Good Life, Texas Style.

CITY OFFICIALS:

MAYOR:	Jason Bienski
CITY COUNCIL:	Richard M. Cortez, Sr. Paul Madison, Sr. Greg Owens Ann M. Horton Art Hughes Chuck Konderla
PUBLIC WORKS DIRECTOR:	Jayson Barfknecht, PE
CITY ENGINEER:	Paul Kaspar, PE
CITY ATTORNEY:	Janis Hampton

STATE OF TEXAS
V. RYAN SOWA
91171
REGISTERED
PROFESSIONAL ENGINEER
01/07/13

JANUARY 2013

PREPARED FOR:
CITY OF BRYAN
300 SOUTH TEXAS AVE.
BRYAN, TEXAS 77840
Ph. (979) 209-5030
Fax (979) 209-5035

PREPARED BY:
Kimley-Horn and Associates, Inc.
2800 SOUTH TEXAS AVENUE, SUITE 201
BRYAN, TEXAS 77802
TEXAS REGISTERED ENGINEERING FIRM F-928
Tel. No. (979) 775-9595
Fax No. (979) 775-9599

KHA JOB #: 061271612
CITY JOB #: 411-D3-1106

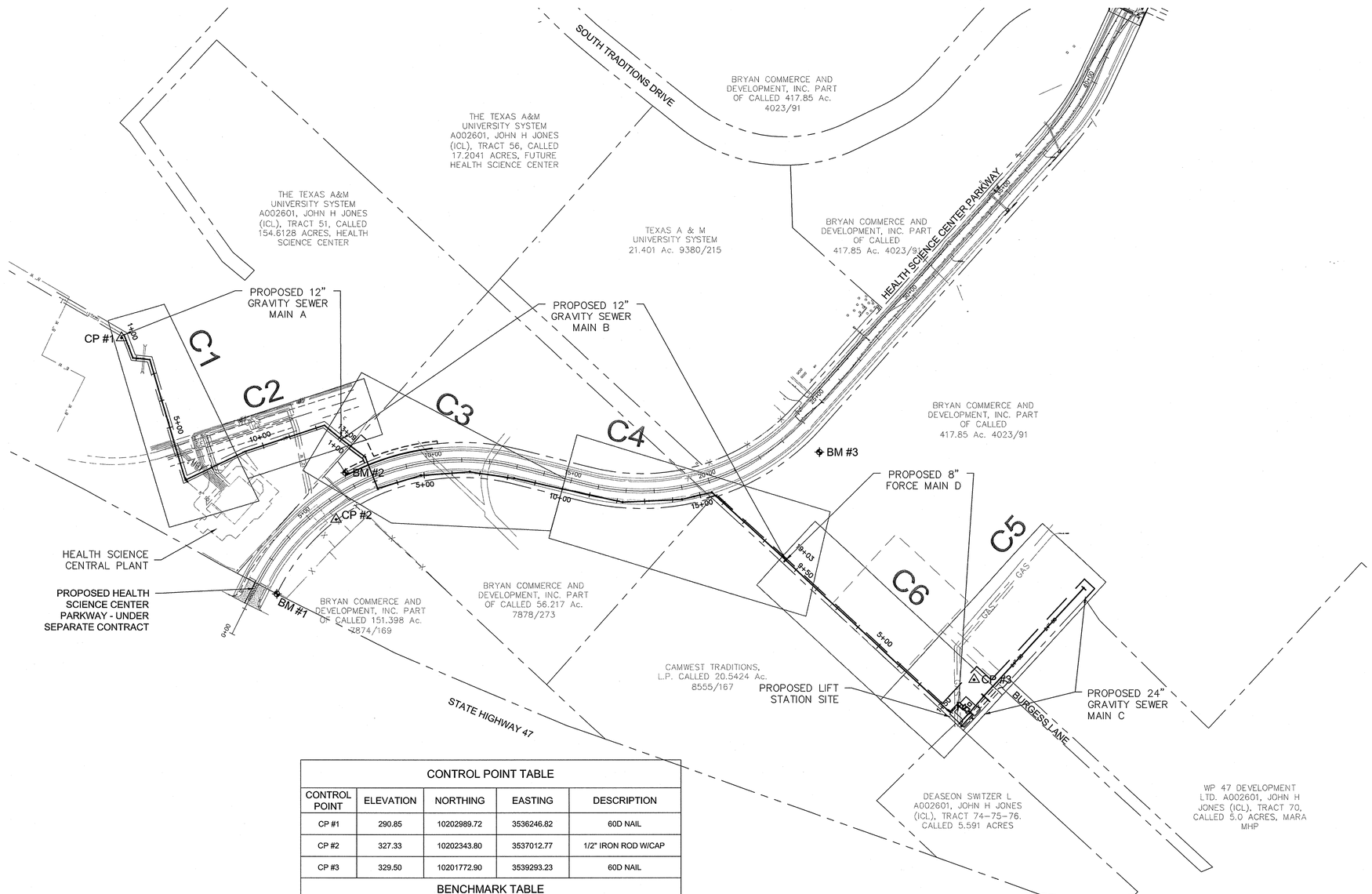

CONTROL POINT TABLE				
CONTROL POINT	ELEVATION	NORTHING	EASTING	DESCRIPTION
CP #1	290.85	10202989.72	3536246.82	60D NAIL
CP #2	327.33	10202343.80	3537012.77	1/2" IRON ROD W/CAP
CP #3	329.50	10201772.90	3539293.23	60D NAIL
BENCHMARK TABLE				
BM #1	327.17	10202078.62	3536800.65	1/2" IRON ROD
BM #2	319.82	10202511.11	3537046.00	1/2" IRON ROD
BM #3	338.28	10202584.90	3538741.27	1/2" IRON ROD

No.	REVISIONS	DATE	BY

Kimley-Horn and Associates, Inc.
© 2012 KIMLEY-HORN AND ASSOCIATES, INC.
TEXAS REGISTERED ENGINEERING FIRM F-928
2800 SOUTH TEXAS AVENUE, SUITE 201
BRYAN, TX 77842
PHONE: 979-775-9595 FAX: 979-775-9599
WWW.KIMLEY-HORN.COM

STATE OF TEXAS
V. RYAN SOWA
91171
REGISTERED PROFESSIONAL ENGINEER
01/07/13

KHA PROJECT 061271612
DATE JANUARY 2013
SCALE AS SHOWN
DESIGNED BY VRS
DRAWN BY ABC
CHECKED BY MJM

PROJECT LAYOUT AND DIMENSIONAL CONTROL PLAN

BIO-CORRIDOR INFRASTRUCTURE

PREPARED FOR

CITY OF BRYAN TEXAS

SHEET NUMBER

G3

Plotted By:Chovero, Denyce Sheet Set:Kha Layout:G3 Project Layout and Dimensional Control Plan January 03, 2013 02:47:02pm K:\SNA_Utilities\061271612\CAD\SHEETS\G_Proj.layout.dwg
This document, together with the concepts and designs presented herein, as an instrument of service, is intended only for the specific purpose and client for which it was prepared. Reuse of and improper reliance on this document without written authorization and adaptation by Kimley-Horn and Associates, Inc. shall be without liability to Kimley-Horn and Associates, Inc.

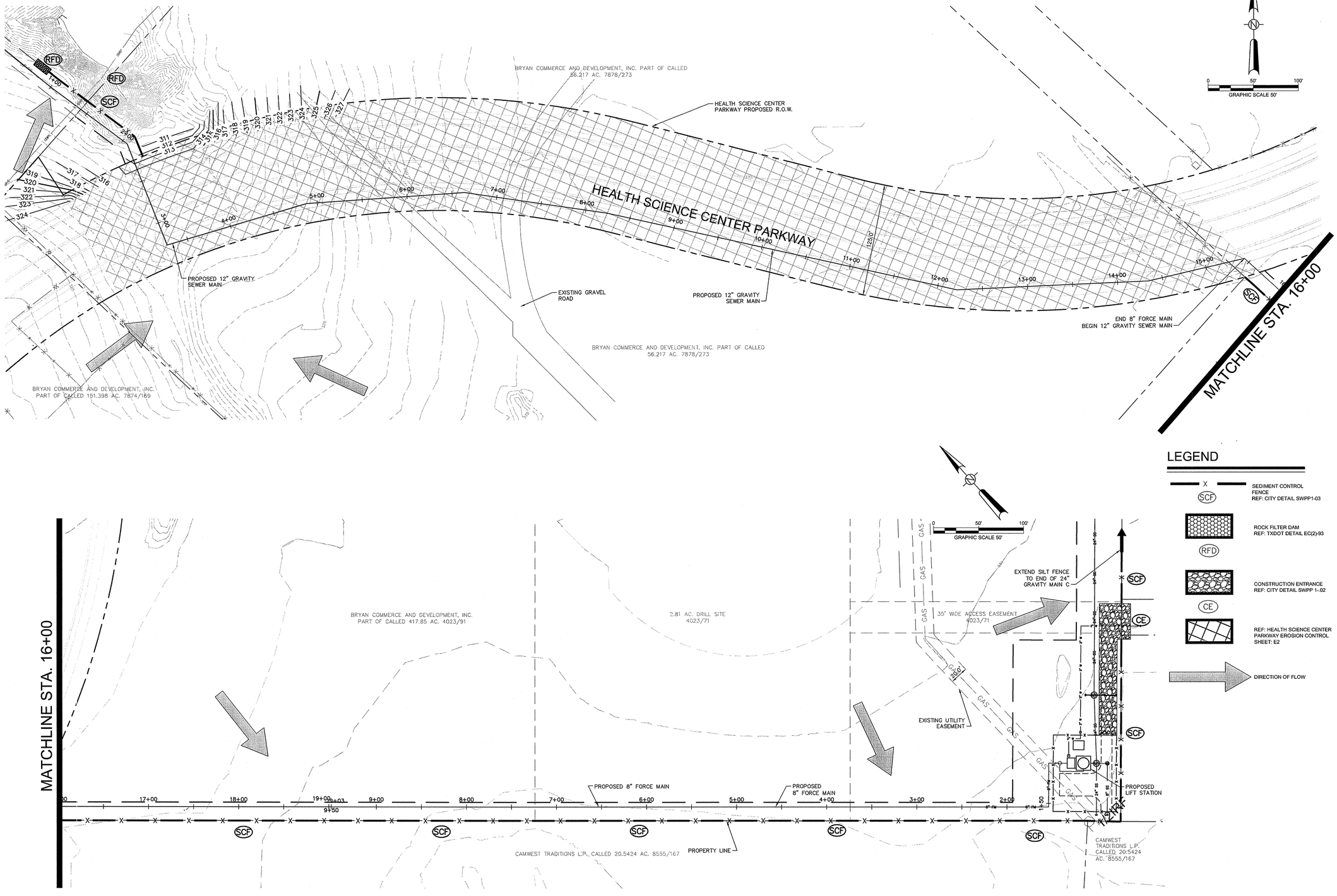

No.	REVISIONS	DATE	BY

Kimley-Horn and Associates, Inc.
© 2012 KIMLEY-HORN AND ASSOCIATES, INC.
TEXAS REGISTERED ENGINEERING FIRM F-928
2600 SOUTH TEXAS AVENUE, SUITE 201
BRYAN, TX 77842
PHONE: 979-775-9595 FAX: 979-775-9599
WWW.KIMLEY-HORN.COM

V. Ryan Sowa
STATE OF TEXAS
V. RYAN SOWA
91171
REGISTERED PROFESSIONAL ENGINEER
01/07/13

KHA PROJECT	061271612
DATE	JANUARY 2013
SCALE	AS SHOWN
DESIGNED BY	VRS
DRAWN BY	ABC
CHECKED BY	MJM

EROSION CONTROL PLAN

BIO-CORRIDOR INFRASTRUCTURE
PREPARED FOR
CITY OF BRYAN
TEXAS

SHEET NUMBER
G4

Plotted By:Chavero, Derryce Sheet Set:Kha Layout:G4 Erosion Control Plan January 03, 2013 02:47:26pm K:\SNA_Utilities\061271612\CAD\SHEETS\G_ErosCon.dwg
This document, together with the concepts and designs presented herein, as an instrument of service, is intended only for the specific purpose and client for which it was prepared. Reuse of and improper reliance on this document without written authorization and adaptation by Kimley-Horn and Associates, Inc. shall be without liability to Kimley-Horn and Associates, Inc.

Plotted By:Chavero, Denyce Sheet Set:Kha Layout:C1 12-Inch Gravity Sewer Main A (Sheet 1 of 2) January 03, 2013 02:48:14pm K:\SNA_Utilities\061271612\CAD\SHEETS\C_P&P.dwg
This document, together with the concepts and designs presented herein, as an instrument of service, is intended only for the specific purpose and client for which it was prepared. Reuse of and improper reliance on this document without written authorization and adaptation by Kimley-Horn and Associates, Inc. shall be without liability to Kimley-Horn and Associates, Inc.

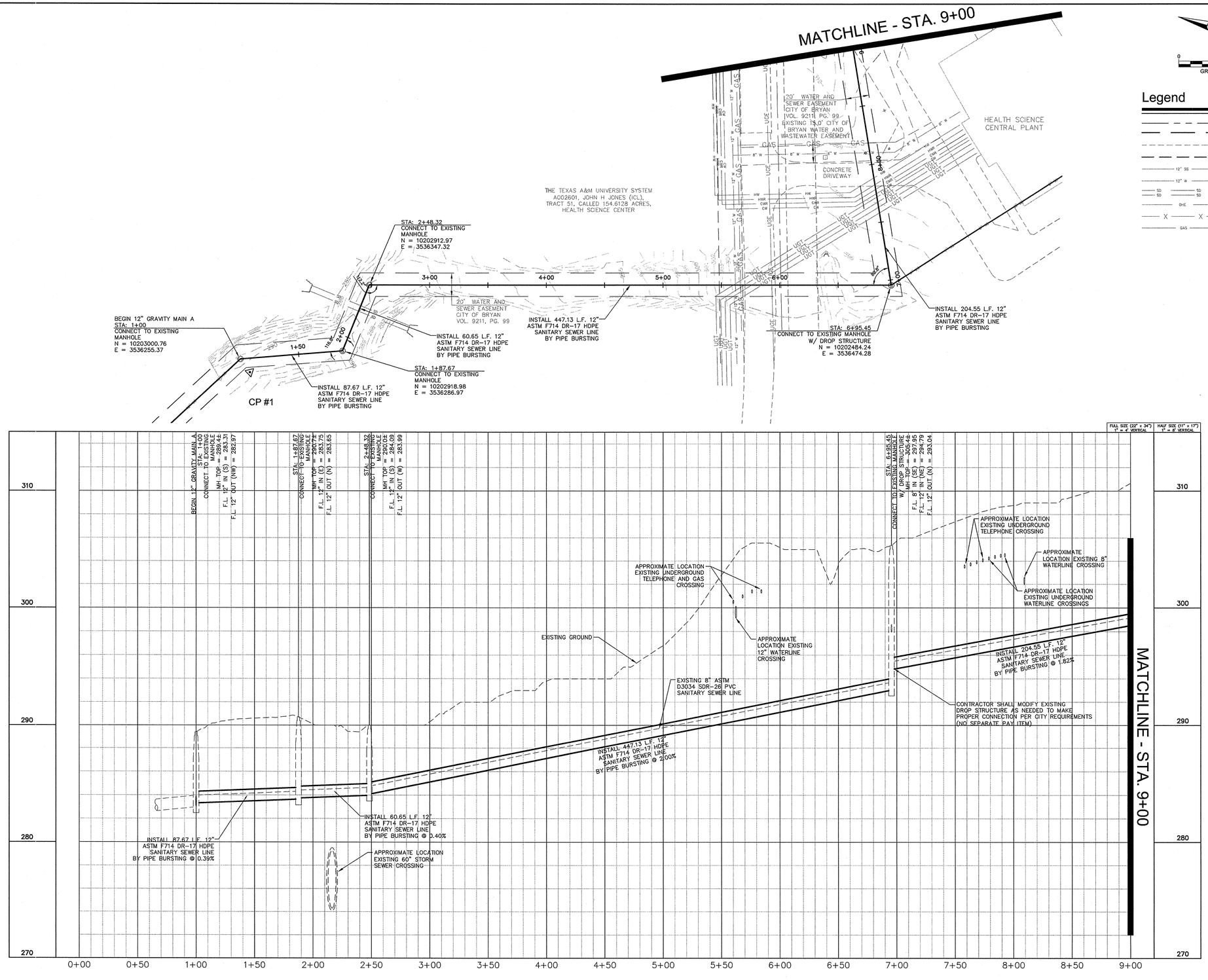

No.	REVISIONS	DATE	BY

Kimley-Horn and Associates, Inc.
© 2012 KIMLEY-HORN AND ASSOCIATES, INC.
TBPE FIRM REGISTRATION #: F-928
2800 SOUTH TEXAS AVENUE, SUITE 201
BRYAN, TX 77842
PHONE: 979-775-9595 FAX: 979-775-9599
WWW.KIMLEY-HORN.COM

STATE OF TEXAS
V. RYAN SOWA
91171
REGISTERED PROFESSIONAL ENGINEER
01/07/13

KHA PROJECT	061271612
DATE	JANUARY 2013
SCALE	AS SHOWN
DESIGNED BY	VRS
DRAWN BY	ABC
CHECKED BY	MJM

12-INCH GRAVITY SEWER MAIN A (SHEET 1 OF 2)

BIO-CORRIDOR INFRASTRUCTURE
PREPARED FOR
CITY OF BRYAN
TEXAS

SHEET NUMBER
C1

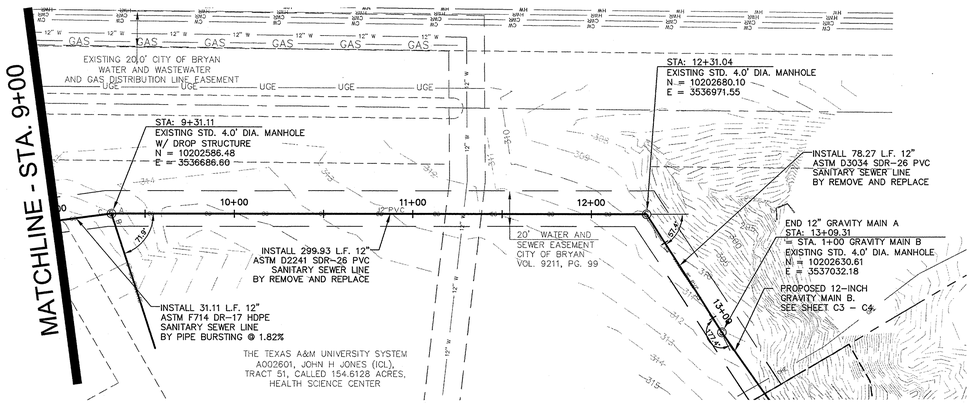

NOTE: REMOVAL OF EXISTING SEWER PIPE SHALL BE SUBSIDIARY TO THE COST OF THE INSTALLATION OF THE NEW SEWER LINE.

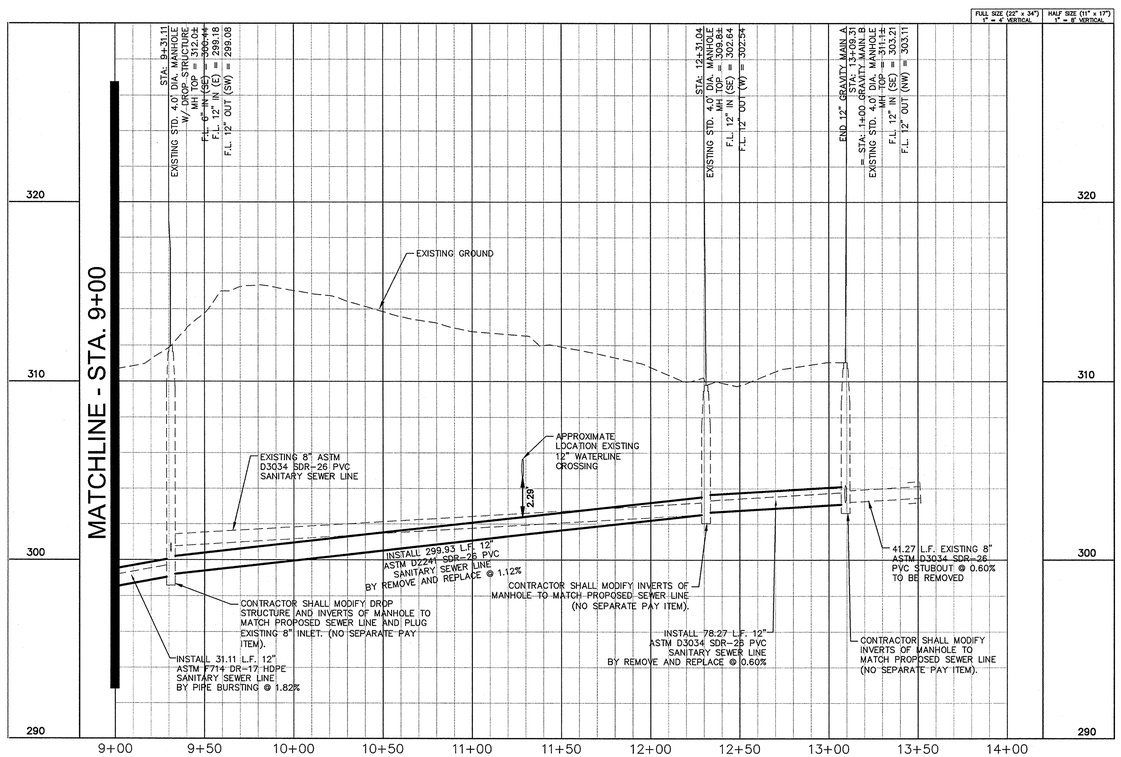

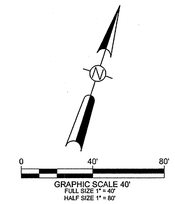

Legend

- RIGHT OF WAY
- EASEMENT
- EX. EDGE OF PAVEMENT
- EX. EASEMENT
- 12" SS — EX. SANITARY SEWER
- 12" W — EX. WATER
- SD — EX. STORM SEWER
- OHE — EX. OVERHEAD UTILITIES
- X — EX. FENCE
- GAS — EX. GAS

No.	REVISIONS	DATE	BY

Kimley-Horn and Associates, Inc.

© 2012 KIMLEY-HORN AND ASSOCIATES, INC.

TBPE FIRM REGISTRATION #: F-928
2800 SOUTH TEXAS AVENUE, SUITE 201
BRYAN, TX 77842
PHONE: 979-775-8595 FAX: 979-775-9599
WWW.KIMLEY-HORN.COM

STATE OF TEXAS
V. RYAN SOWA
91171
REGISTERED PROFESSIONAL ENGINEER
01/07/13

KHA PROJECT	061271612
DATE	JANUARY 2013
SCALE	AS SHOWN
DESIGNED BY	VRS
DRAWN BY	ABC
CHECKED BY	MJM

12-INCH GRAVITY SEWER MAIN A (SHEET 2 OF 2)

BIO-CORRIDOR INFRASTRUCTURE
PREPARED FOR
CITY OF BRYAN TEXAS

SHEET NUMBER
C2

Plotted By:Chovero, Denyce Sheet Set:Kha Layout:C2 12-Inch Gravity Sewer Main A (Sheet 2 of 2) January 03, 2013 02:48:31pm K:\SNA_Utilities\061271612\CAD\SHEETS\C_P&P.dwg
This document, together with the concepts and designs presented herein, as an instrument of service, is intended only for the specific purpose and client for which it was prepared. Reuse of and improper reliance on this document without written authorization and adaptation by Kimley-Horn and Associates, Inc. shall be without liability to Kimley-Horn and Associates, Inc.

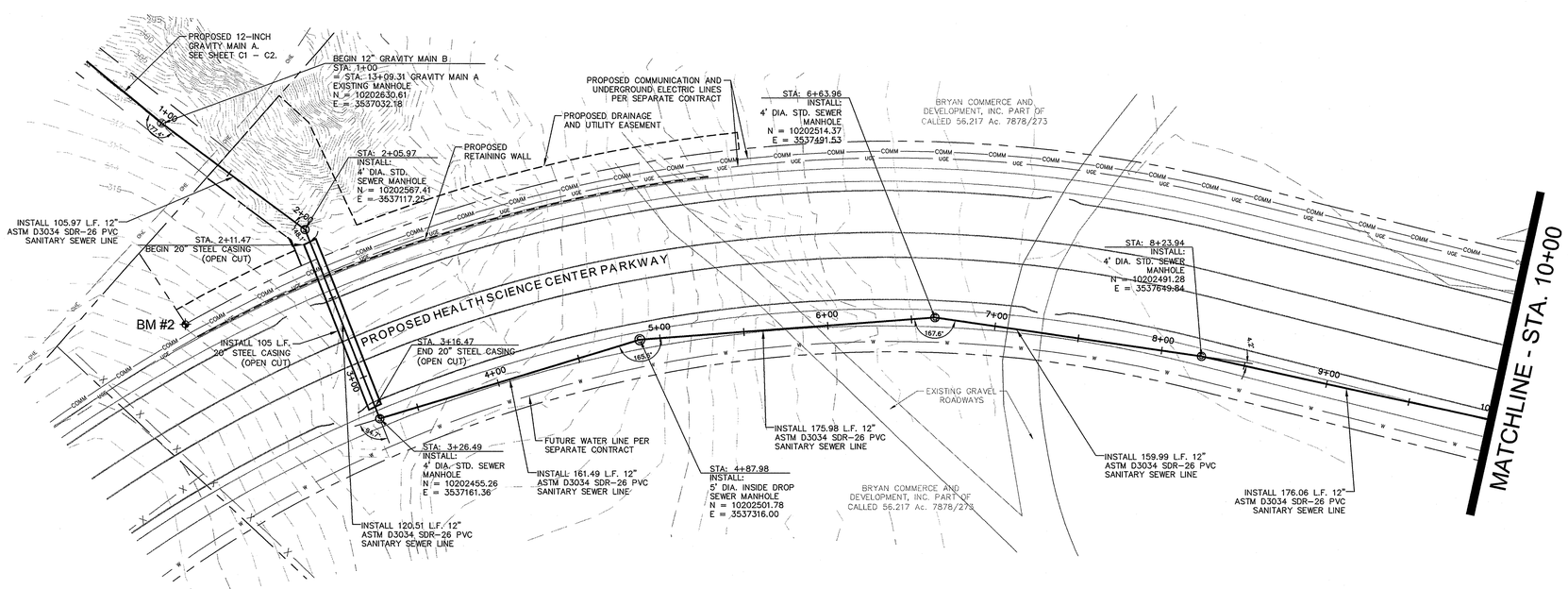

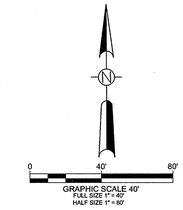

Legend

- RIGHT OF WAY
- EASEMENT
- EX. EDGE OF PAVEMENT
- EX. EASEMENT
- EX. SANITARY SEWER
- EX. WATER
- EX. STORM SEWER
- EX. OVERHEAD UTILITIES
- EX. FENCE
- EX. GAS

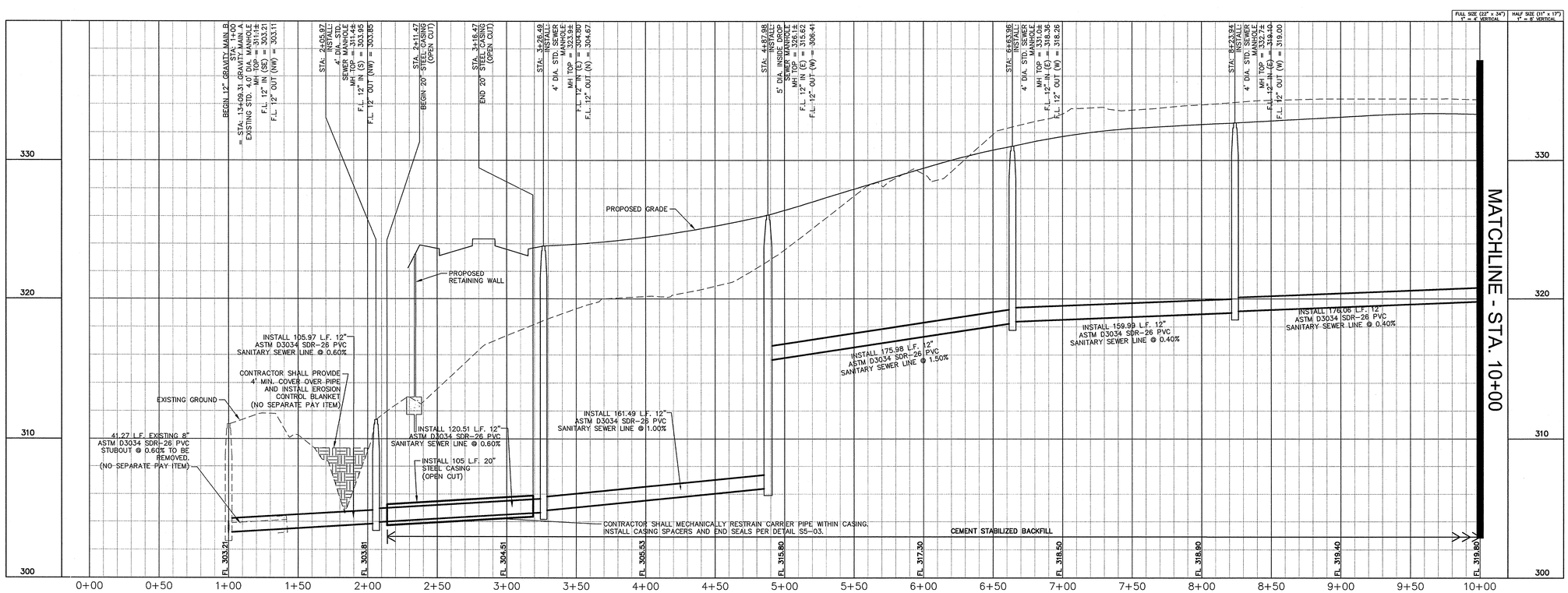

No.	REVISIONS	DATE	BY

Kimley-Horn and Associates, Inc.

© 2012 KIMLEY-HORN AND ASSOCIATES, INC.

TBPE FIRM REGISTRATION #: F-928
2600 SOUTH TEXAS AVENUE, SUITE 201
BRYAN, TX 77842
PHONE: 979-775-9595 FAX: 979-775-9599
WWW.KIMLEY-HORN.COM

STATE OF TEXAS
V. RYAN SOWA
91171
REGISTERED PROFESSIONAL ENGINEER
01/07/13

KHA PROJECT	061271612
DATE	JANUARY 2013
SCALE	AS SHOWN
DESIGNED BY	VRS
DRAWN BY	ABC
CHECKED BY	MJM

12-INCH GRAVITY SEWER MAIN B (SHEET 1 OF 2)

BIO-CORRIDOR INFRASTRUCTURE

PREPARED FOR

CITY OF BRYAN TEXAS

SHEET NUMBER

C3

Plotted By:Chavero, Denyce Sheet Set:Kha Layout:C3 12-Inch Gravity Sewer Main B (Sheet 1 of 2) January 03, 2013 02:48:49pm K:\SNA_Utilities\061271612\CAD\SHEETS\C_P&P.dwg
This document, together with the concepts and designs presented herein, as an instrument of service, is intended only for the specific purpose and client for which it was prepared. Reuse of and improper reliance on this document without written authorization and adaptation by Kimley-Horn and Associates, Inc. shall be without liability to Kimley-Horn and Associates, Inc.

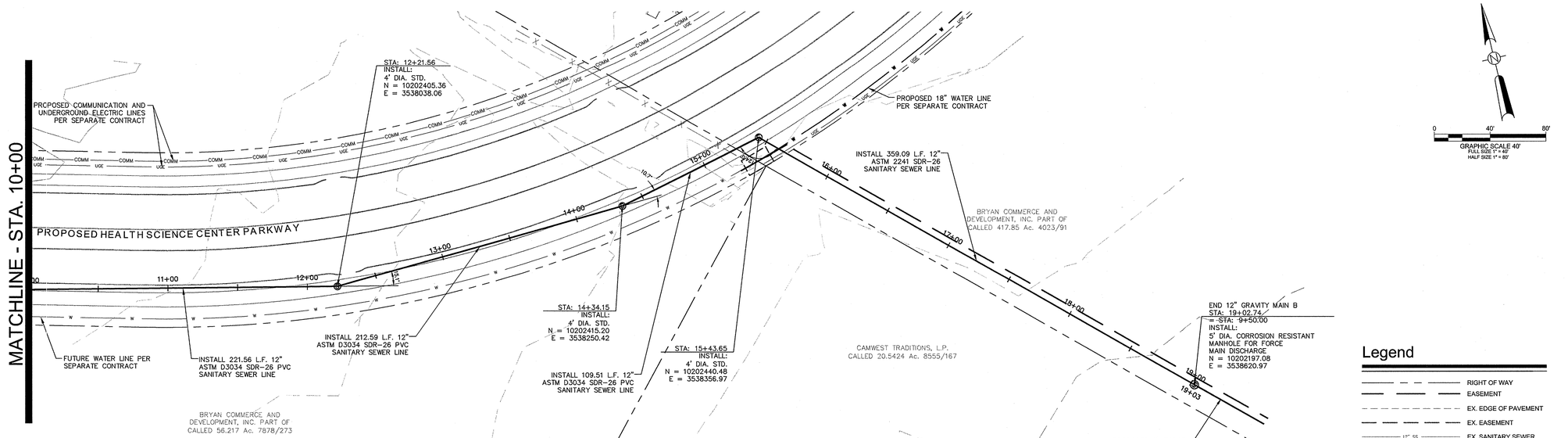

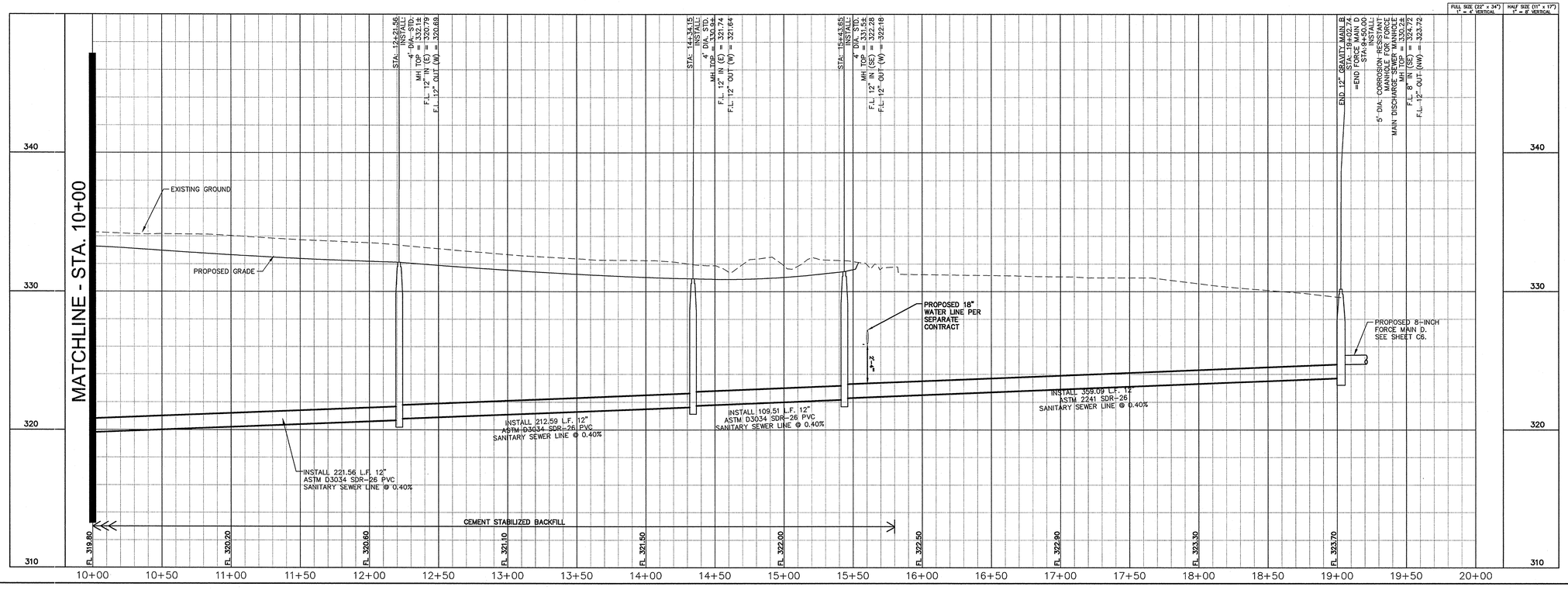

Legend

- RIGHT OF WAY
- EASEMENT
- EX. EDGE OF PAVEMENT
- EX. EASEMENT
- 12" SS — EX. SANITARY SEWER
- 12" W — EX. WATER
- SD — EX. STORM SEWER
- OHE — EX. OVERHEAD UTILITIES
- X — EX. FENCE
- GAS — EX. GAS

No.	REVISIONS	DATE	BY

Kimley-Horn and Associates, Inc.

© 2012 KIMLEY-HORN AND ASSOCIATES, INC.

TEXAS REGISTERED ENGINEERING FIRM F-928
2800 SOUTH TEXAS AVENUE, SUITE 201
BRYAN, TX 77842
PHONE: 979-775-9595 FAX: 979-775-9599
WWW.KIMLEY-HORN.COM

STATE OF TEXAS
V. RYAN SOWA
91171
REGISTERED PROFESSIONAL ENGINEER
01/07/13

KHA PROJECT	061271612
DATE	JANUARY 2013
SCALE	AS SHOWN
DESIGNED BY	VRS
DRAWN BY	ABC
CHECKED BY	MJM

12-INCH GRAVITY SEWER MAIN B (SHEET 2 OF 2)

BIO-CORRIDOR INFRASTRUCTURE

PREPARED FOR

CITY OF BRYAN TEXAS

SHEET NUMBER

C4

Plotted By:Chavero, Denyce Sheet Set:Kha Layout:C4 12-Inch Gravity Sewer Main B (Sheet 2 of 2) January 03, 2013 02:49:07pm K:\SNA_Utilities\061271612\CAD\SHEETS\C_P&P.dwg
This document, together with the concepts and designs presented herein, as an instrument of service, is intended only for the specific purpose and client for which it was prepared. Reuse of and improper reliance on this document without written authorization and adaptation by Kimley-Horn and Associates, Inc. shall be without liability to Kimley-Horn and Associates, Inc.

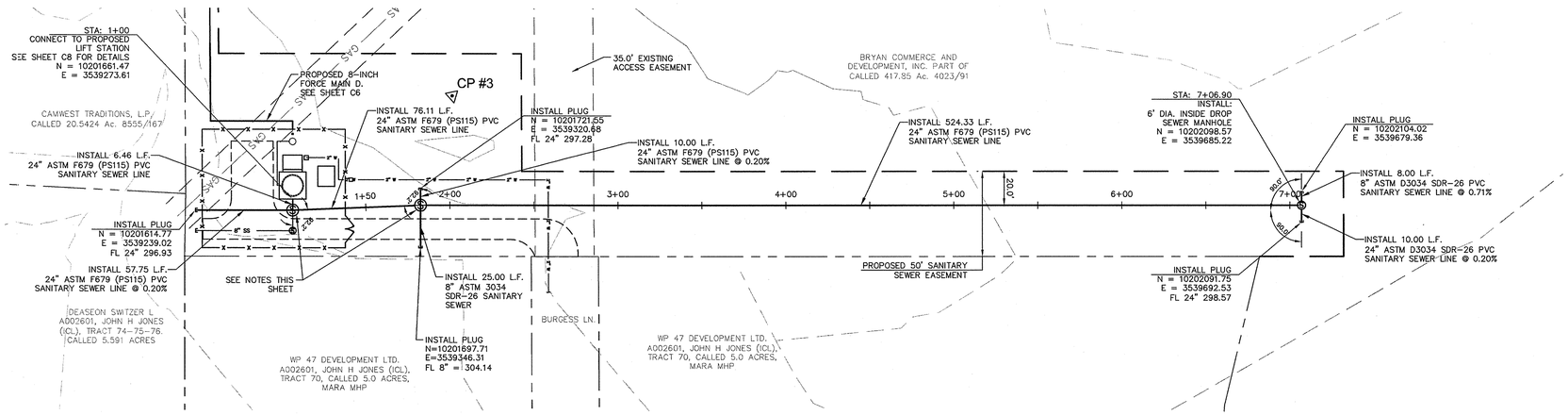

NOTE: INSTALLATION OF PROPOSED PLUGS SHALL BE SUBSIDIARY TO THE COST OF THE SEWER LINE.

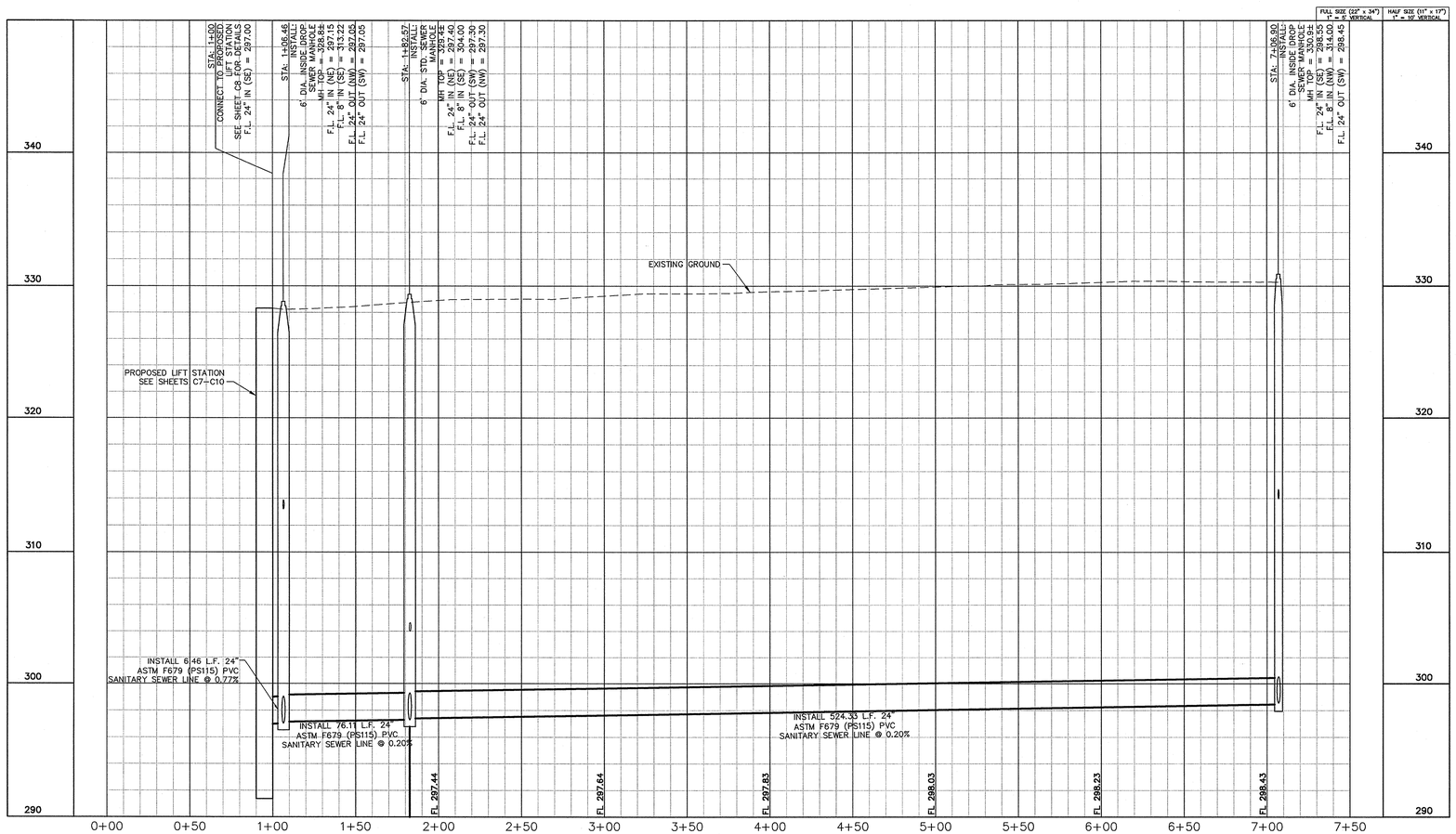

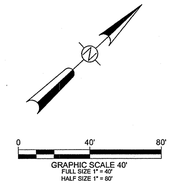

Legend

- RIGHT OF WAY
- EASEMENT
- EX. EDGE OF PAVEMENT
- EX. EASEMENT
- 12" SS — EX. SANITARY SEWER
- 12" W — EX. WATER
- SD / SD — EX. STORM SEWER
- OHE — EX. OVERHEAD UTILITIES
- X — EX. FENCE
- GAS — EX. GAS

Notes

THE PROPOSED MANHOLE AT STA. 1+06.46 HAS A F.L. OUT TO THE SOUTHWEST AND MANHOLE AT STA. 1+82.57 HAS A F.L. OUT TO THE NORTHWEST. THESE CONNECTIONS AND STUBOUTS ARE FOR POTENTIAL FUTURE EXTENSIONS. EACH MANHOLE SHALL INCLUDE A BENCH AND PENETRATION FOR THIS FUTURE CONNECTION. HOWEVER, EACH PENETRATION SHALL BE GROUTED TO PREVENT FLOW INTO THESE STUBOUTS AND THE GROUT WILL BE REMOVED WHEN NEEDED IN THE FUTURE.

No.	REVISIONS	DATE	BY

Kimley-Horn and Associates, Inc.
© 2012 KIMLEY-HORN AND ASSOCIATES, INC.
TEXAS REGISTERED ENGINEERING FIRM F-928
2600 SOUTH TEXAS AVENUE, SUITE 201
BRYAN, TX 77842
PHONE: 979-775-9595 FAX: 979-775-9599
WWW.KIMLEY-HORN.COM

STATE OF TEXAS
V. RYAN SOWA
91171
REGISTERED PROFESSIONAL ENGINEER
01/07/13

KHA PROJECT 061271612	
DATE JANUARY 2013	
SCALE AS SHOWN	
DESIGNED BY VRS	
DRAWN BY ABC	
CHECKED BY MJM	

24-INCH GRAVITY SEWER MAIN C

BIO-CORRIDOR INFRASTRUCTURE
PREPARED FOR
CITY OF BRYAN
TEXAS

SHEET NUMBER
C5

Plotted By:Chovero, Denyce Sheet Set:Kha Layout:C5 24-Inch Gravity Sewer Main C January 03, 2013 02:49:43pm K:\SNA_Utilities\061271612\CAD\SHEETS\C-P&P_MainC.dwg
This document, together with the concepts and designs presented herein, as an instrument of service, is intended only for the specific purpose and client for which it was prepared. Reuse of and improper reliance on this document without written authorization and adaptation by Kimley-Horn and Associates, Inc. shall be without liability to Kimley-Horn and Associates, Inc.

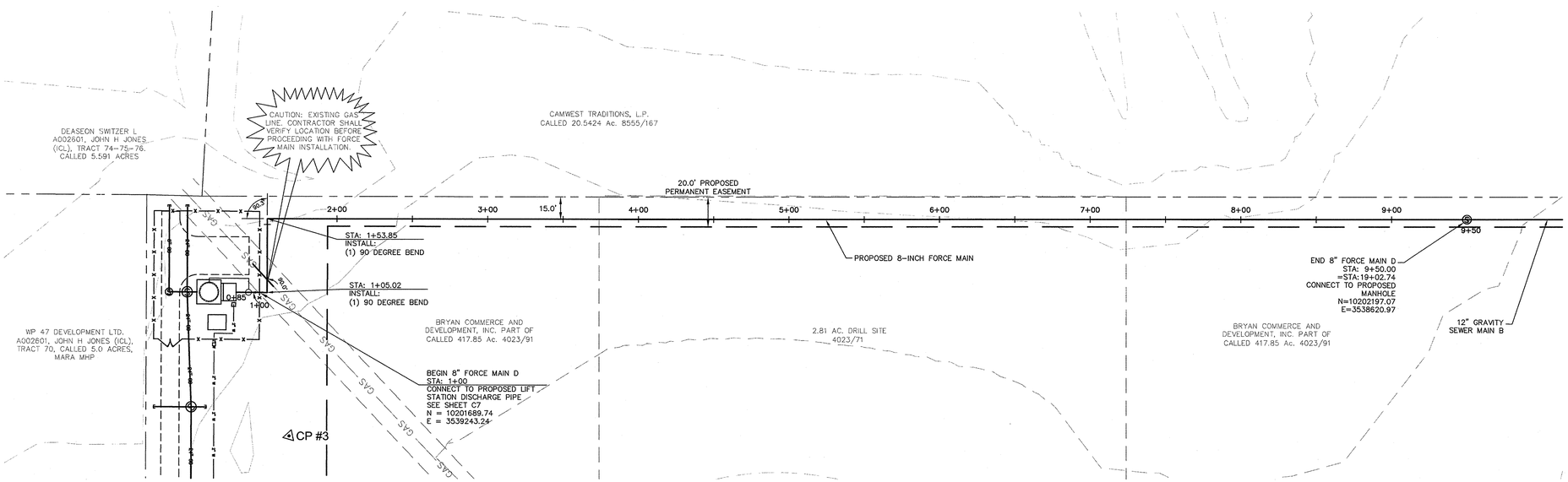

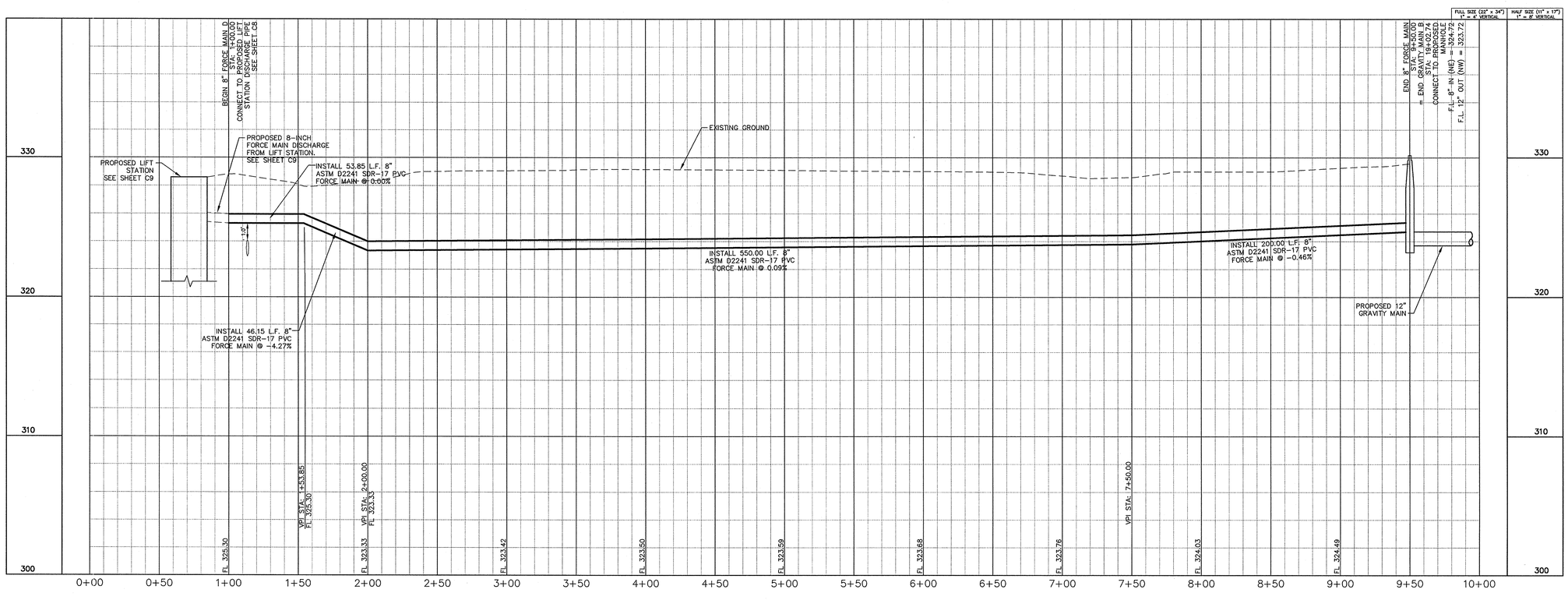

Legend

- RIGHT OF WAY
- EASEMENT
- EX. EDGE OF PAVEMENT
- EX. EASEMENT
- EX. SANITARY SEWER
- EX. WATER
- EX. STORM SEWER
- EX. OVERHEAD UTILITIES
- EX. FENCE
- EX. GAS

0 40' 80'
GRAPHIC SCALE 40'
FULL SIZE 1" = 40'
HALF SIZE 1" = 80'

No.	REVISIONS	DATE	BY

Kimley-Horn and Associates, Inc.
© 2012 KIMLEY-HORN AND ASSOCIATES, INC.
TBPE FIRM REGISTRATION NO. F-928
2800 SOUTH TEXAS AVENUE, SUITE 201
BRYAN, TX 77842
PHONE: 979-775-9595 FAX: 979-775-9599
WWW.KIMLEY-HORN.COM

STATE OF TEXAS
V. RYAN SOWA
91171
REGISTERED PROFESSIONAL ENGINEER
01/07/13

KHA PROJECT 061271612
DATE JANUARY 2013
SCALE AS SHOWN
DESIGNED BY VRS
DRAWN BY ABC
CHECKED BY MJM

8-INCH FORCE MAIN D

BIO-CORRIDOR INFRASTRUCTURE

PREPARED FOR

CITY OF BRYAN
TEXAS

SHEET NUMBER
C6

Plotted By:Chovero, Denyce Sheet Set:Kha Layout:C6 8-Inch Force Main D (Sheet 1 of 2) January 03, 2013 02:50:31pm K:\SNA_Utilities\061271612\CAD\SHEETS\C_P&P.dwg
This document, together with the concepts and designs presented herein, as an instrument of service, is intended only for the specific purpose and client for which it was prepared. Reuse of and improper reliance on this document without written authorization and adaptation by Kimley-Horn and Associates, Inc. shall be without liability to Kimley-Horn and Associates, Inc.

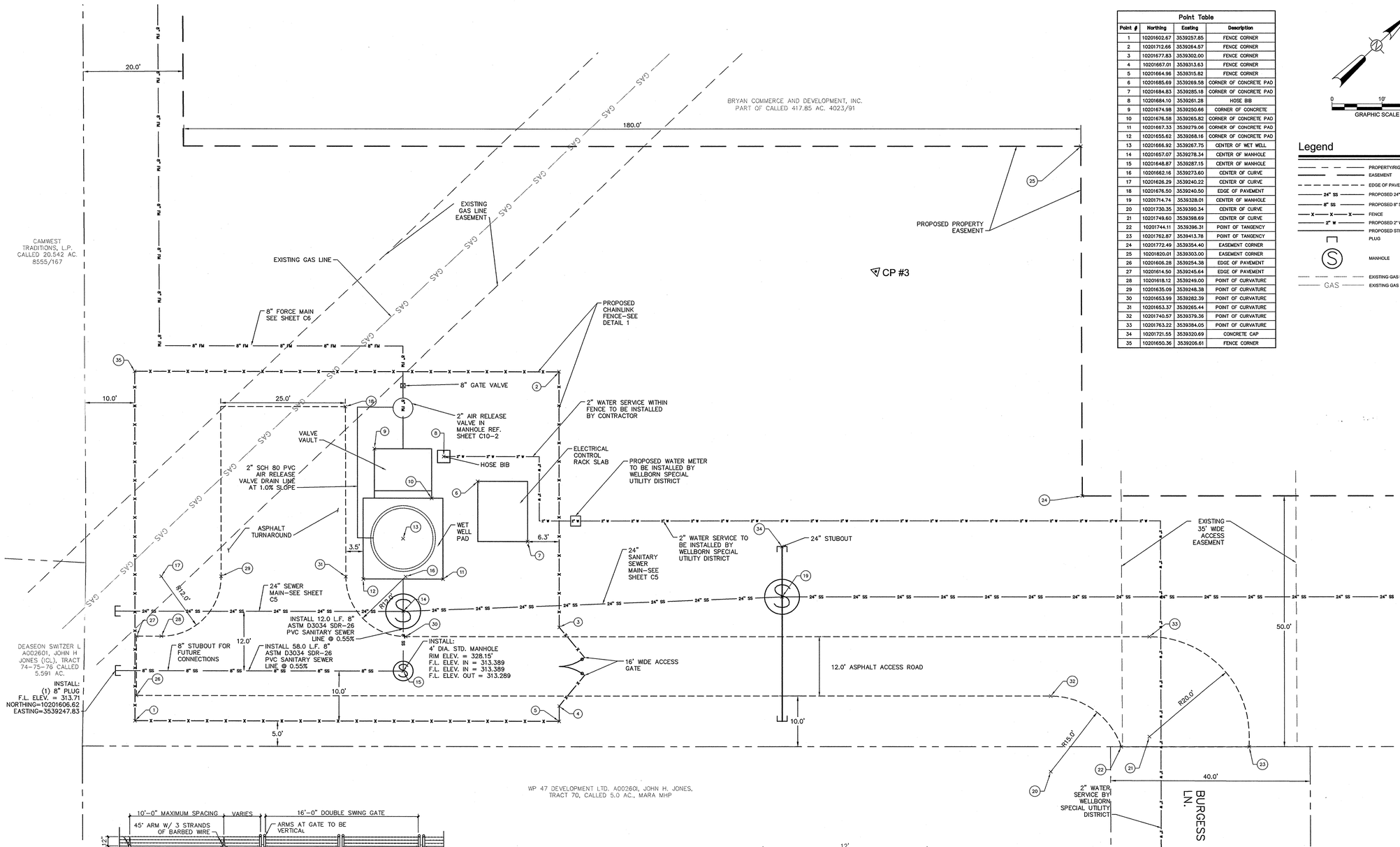

Point Table			
Point #	Northing	Easting	Description
1	10201602.67	3539257.85	FENCE CORNER
2	10201712.66	3539264.57	FENCE CORNER
3	10201677.83	3539302.00	FENCE CORNER
4	10201657.01	3539313.63	FENCE CORNER
5	10201664.96	3539315.82	FENCE CORNER
6	10201685.69	3539269.58	CORNER OF CONCRETE PAD
7	10201684.83	3539285.18	CORNER OF CONCRETE PAD
8	10201684.10	3539261.28	HOSE BIB
9	10201674.98	3539250.66	CORNER OF CONCRETE
10	10201676.58	3539265.82	CORNER OF CONCRETE PAD
11	10201667.33	3539279.06	CORNER OF CONCRETE PAD
12	10201655.62	3539268.16	CORNER OF CONCRETE PAD
13	10201666.92	3539267.75	CENTER OF WET WELL
14	10201657.07	3539278.34	CENTER OF MANHOLE
15	10201648.87	3539287.15	CENTER OF MANHOLE
16	10201662.16	3539273.60	CENTER OF CURVE
17	10201626.29	3539240.22	CENTER OF CURVE
18	10201676.50	3539240.50	EDGE OF PAVEMENT
19	10201714.74	3539328.01	CENTER OF MANHOLE
20	10201730.35	3539390.34	CENTER OF CURVE
21	10201749.60	3539398.69	CENTER OF CURVE
22	10201744.11	3539396.31	POINT OF TANGENCY
23	10201762.87	3539413.78	POINT OF TANGENCY
24	10201772.49	3539354.40	EASEMENT CORNER
25	10201820.01	3539303.00	EASEMENT CORNER
26	10201606.28	3539254.38	EDGE OF PAVEMENT
27	10201614.50	3539245.64	EDGE OF PAVEMENT
28	10201618.12	3539249.00	POINT OF CURVATURE
29	10201635.09	3539248.38	POINT OF CURVATURE
30	10201653.99	3539282.39	POINT OF CURVATURE
31	10201653.37	3539265.44	POINT OF CURVATURE
32	10201740.57	3539379.36	POINT OF CURVATURE
33	10201763.22	3539384.05	POINT OF CURVATURE
34	10201721.55	3539320.69	CONCRETE CAP
35	10201650.36	3539206.61	FENCE CORNER

GRAPHIC SCALE 10'

Legend

- PROPERTY/RIGHT-OF-WAY LINE
- EASEMENT
- EDGE OF PAVEMENT
- 24" SS — PROPOSED 24" SANITARY SEWER
- 8" SS — PROPOSED 8" SANITARY SEWER
- FENCE
- 2" W — PROPOSED 2" WATER
- PROPOSED STRUCTURE
- PLUG
- MANHOLE
- EXISTING GAS LINE EASEMENT
- GAS — EXISTING GAS LINE

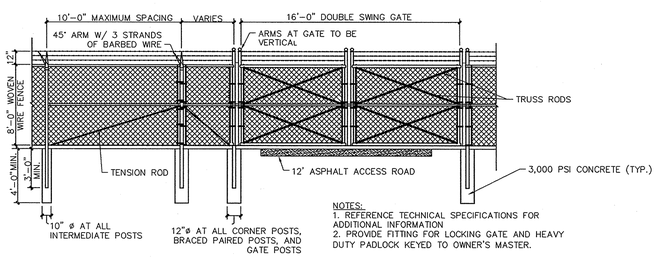

NOTES:
1. REFERENCE TECHNICAL SPECIFICATIONS FOR ADDITIONAL INFORMATION
2. PROVIDE FITTING FOR LOCKING GATE AND HEAVY DUTY PADLOCK KEYED TO OWNER'S MASTER.

1 FENCE AND GATE DETAIL

SCALE: N.T.S

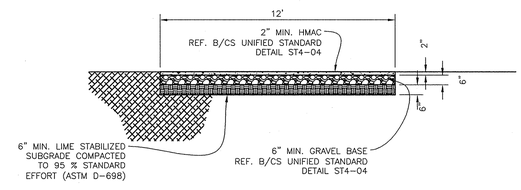

2 12' ACCESS ROAD DETAIL

SCALE: N.T.S

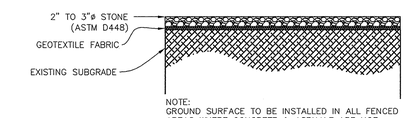

NOTE:
GROUND SURFACE TO BE INSTALLED IN ALL FENCED AREAS WHERE CONCRETE & ASPHALT ARE NOT PROPOSED.

3 LIFT STATION GROUND SURFACE CROSS-SECTION

SCALE: N.T.S

No.	REVISIONS	DATE	BY

Kimley-Horn and Associates, Inc.
© 2012 KIMLEY-HORN AND ASSOCIATES, INC.
TEXAS REGISTERED ENGINEERING FIRM F-928
2800 SOUTH TEXAS AVENUE, SUITE 201
BRYAN, TX 77842
PHONE: 979-775-9595 FAX: 979-775-9599
WWW.KIMLEY-HORN.COM

STATE OF TEXAS
V. RYAN SOWA
91171
REGISTERED PROFESSIONAL ENGINEER
01/07/13

KHA PROJECT	061271612
DATE	JANUARY 2013
SCALE	AS SHOWN
DESIGNED BY	VRS
DRAWN BY	ABC
CHECKED BY	MJM

LIFT STATION SITE PLAN

BIO-CORRIDOR INFRASTRUCTURE

PREPARED FOR

CITY OF BRYAN TEXAS

SHEET NUMBER

C7

Plotted By:Chavero, Denyce Sheet Set:Kha Layout:C8 Lift Station Site Plan January 03, 2013 02:50:50pm K:\SNA_Utilities\061271612\CAD\SHEETS\C_LSSite.dwg
This document, together with the concepts and designs presented herein, as an instrument of service, is intended only for the specific purpose and client for which it was prepared. Reuse of and improper reliance on this document without written authorization and adaptation by Kimley-Horn and Associates, Inc. shall be without liability to Kimley-Horn and Associates, Inc.

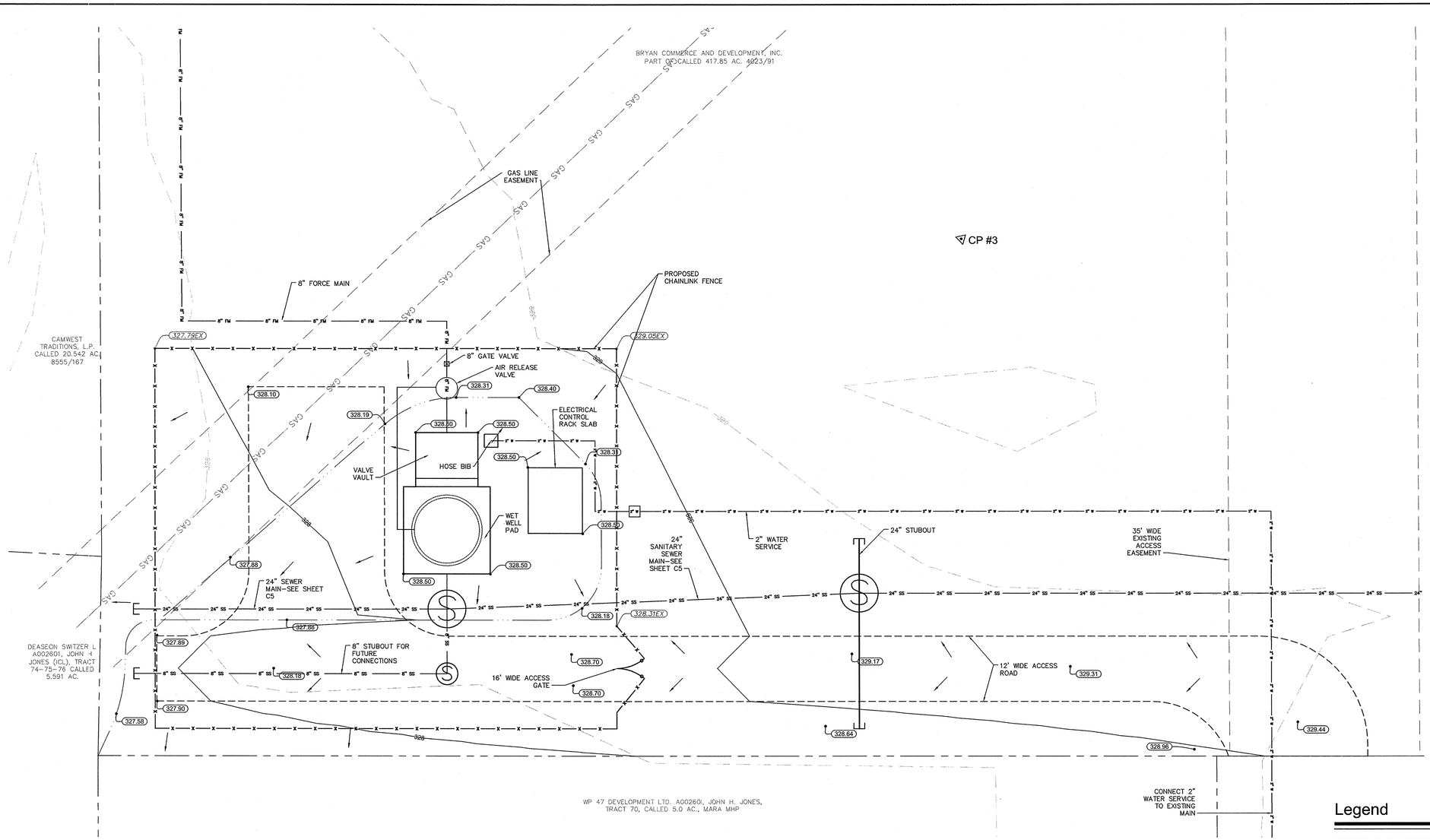

Legend

- PROPERTY/RIGHT-OF-WAY LINE
- EASEMENT
- EDGE OF PAVEMENT
- PROPOSED 24" SANITARY SEWER
- PROPOSED 8" SANITARY SEWER
- FENCE
- PROPOSED 2" WATER
- PROPOSED STRUCTURE
- PLUG
- MANHOLE
- EXISTING GAS LINE EASEMENT
- EXISTING GAS LINE
- EXISTING CONTOURS
- PROPOSED CONTOURS
- 329.17 PROPOSED POINT ELEVATIONS
- 327.74EX EXISTING POINT ELEVATIONS
- PROPOSED FLOW DIRECTION

No.	REVISIONS	DATE	BY

Kimley-Horn and Associates, Inc.
© 2012 KIMLEY-HORN AND ASSOCIATES, INC.
TBAE REGISTRATION NUMBER: F-928
2600 SOUTH TEXAS AVENUE, SUITE 201
BRYAN, TX 77842
PHONE: 979-775-9595 FAX: 979-775-9599
WWW.KIMLEY-HORN.COM

STATE OF TEXAS
V. RYAN SOWA
91171
REGISTERED PROFESSIONAL ENGINEER
01/07/13

KHA PROJECT	061271612
DATE	JANUARY 2013
SCALE	AS SHOWN
DESIGNED BY	VRS
DRAWN BY	ABC
CHECKED BY	MJM

LIFT STATION GRADING PLAN

BIO-CORRIDOR INFRASTRUCTURE

PREPARED FOR

CITY OF BRYAN TEXAS

SHEET NUMBER

C8

Plotted By:Chovero, Denyce Sheet Set:Kha Layout:C9 Lift Station Grading Plan January 03, 2013 02:51:09pm K:\SNA_Utilities\061271612\CAD\SHEETS\C_LSGrad.dwg
This document, together with the concepts and designs presented herein, as an instrument of service, is intended only for the specific purpose and client for which it was prepared. Reuse of and improper reliance on this document without written authorization and adaptation by Kimley-Horn and Associates, Inc. shall be without liability to Kimley-Horn and Associates, Inc.

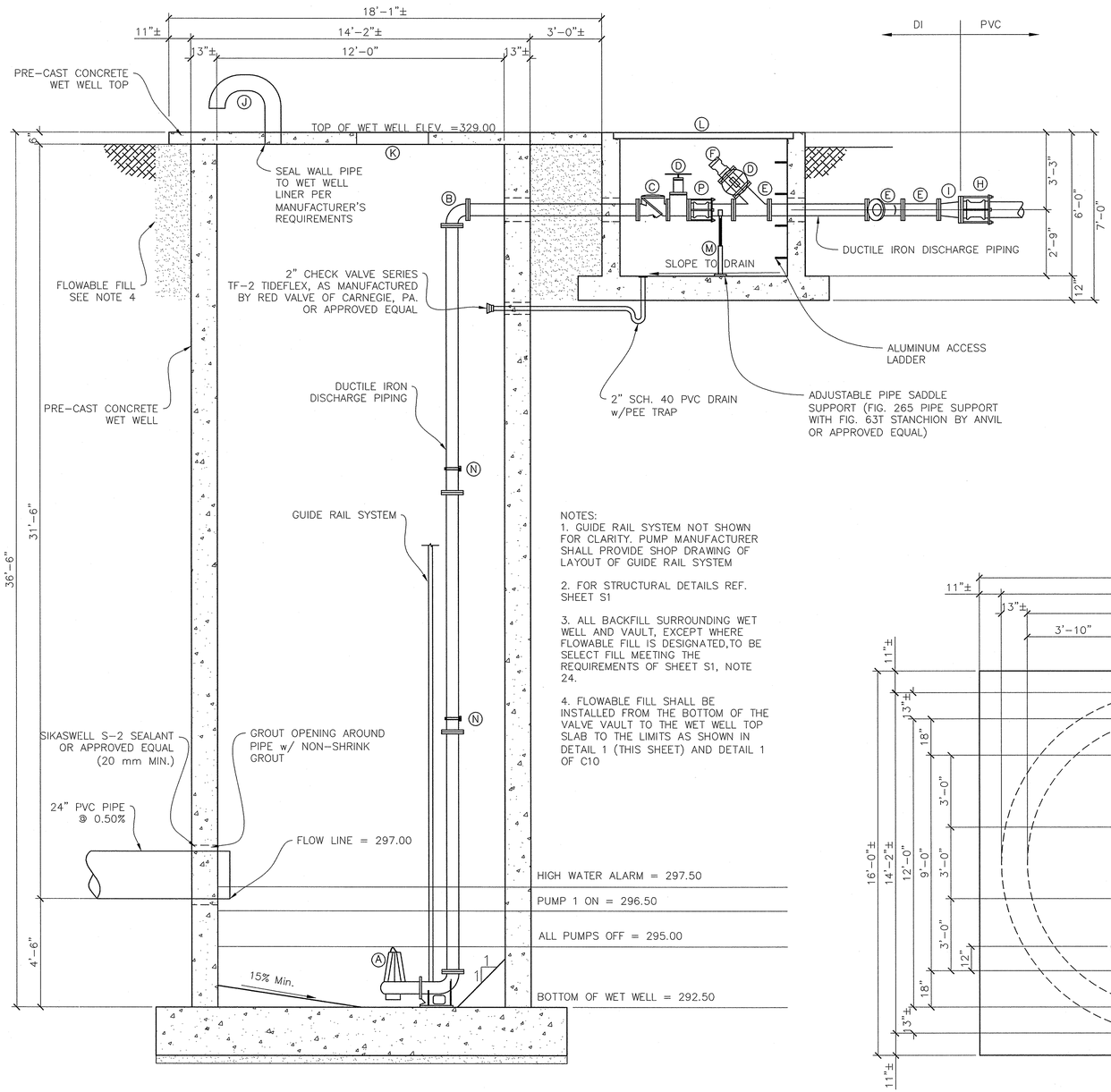

NOTES:
1. GUIDE RAIL SYSTEM NOT SHOWN FOR CLARITY. PUMP MANUFACTURER SHALL PROVIDE SHOP DRAWING OF LAYOUT OF GUIDE RAIL SYSTEM

2. FOR STRUCTURAL DETAILS REF. SHEET S1

3. ALL BACKFILL SURROUNDING WET WELL AND VAULT, EXCEPT WHERE FLOWABLE FILL IS DESIGNATED,TO BE SELECT FILL MEETING THE REQUIREMENTS OF SHEET S1, NOTE 24.

4. FLOWABLE FILL SHALL BE INSTALLED FROM THE BOTTOM OF THE VALVE VAULT TO THE WET WELL TOP SLAB TO THE LIMITS AS SHOWN IN DETAIL 1 (THIS SHEET) AND DETAIL 1 OF C10

1 LIFT STATION SECTION

SCALE: 3/8" = 1'

GENERAL NOTES

1. GROUT OPENING FOR ACCESS FRAME WITH A NON-SHRINK GROUT.
2. ACCESS HATCHES WILL BE FLUSH, MOUNTED, ALUMINUM (BILCO OR EQUAL), H-10 CAPACITY AND HAVE PADLOCK HASPS, DRAINS AND HYDRAULIC OPENERS.
3. CONFIGURATIONS AND DIMENSIONS SHOWN ARE BASED ON THE EQUIPMENT SPECIFIED. THE CONTRACTOR SHALL VERIFY THE LAYOUT AND ALL DIMENSIONS PRIOR TO CONSTRUCTION. THE CONTRACTOR SHALL SUBMIT, TO THE ENGINEER, SHOP DRAWINGS SHOWING THE FINAL LAYOUT AND DIMENSIONS PRIOR TO CONSTRUCTION.
4. REFERENCE SPECIFICATIONS FOR LIFT STATION EQUIPMENT.
5. VENT PIPE SHALL BE STAINLESS STEEL AND SHALL BE INSTALLED WITH A STAINLESS STEEL INSECT SCREEN. THE OPENING SHALL BE 18" ABOVE THE TOP SLAB.
6. ALL COUPLINGS SHALL BE EPOXY COATED STEEL AND SHALL BE DRESSER, SMITH-BLAIR, OR EQUAL. COUPLINGS SHALL BE RESTRAINED WITH A THRUST HARNESS DESIGNED IN ACCORDANCE WITH AWWA M-11.
7. ALL RESTRAINING RODS SHALL BE 316 OR 304 STAINLESS STEEL.
8. INSTALL ISOLATION KITS BETWEEN DISSIMILAR METAL PIPING.
9. ALL PIPE PENETRATIONS INTO WET WELL SHALL INCLUDE A MJxPE WALL CASTING.
10. ALL OPENINGS AND CONNECTIONS THROUGH THE WALL SHALL BE PREFABRICATED AND SEALED TO PREVENT LEAKAGE AND INFILTRATION. THE INSIDE OF THE LIFT STATION SHALL BE SEALED WITH A COATING SYSTEM AS DESCRIBED WITHIN THE SPECIFICATIONS. APPLY COATING IN ACCORDANCE WITH THE MANUFACTURER'S INSTRUCTIONS FOR SURFACE PREPARATION AND APPLICATION TO ALL INTERIOR CONCRETE SURFACES.
11. ALL DUCTILE IRON PIPING AND FITTINGS SHALL BE RATED FOR A WORKING PRESSURE OF 250 PSI. ALL DUCTILE IRON PIPING INSTALLED ABOVE GROUND SHALL BE FLANGED.
12. ALL UNDERGROUND DUCTILE IRON PIPING SHALL BE POLYWRAPPED. ALL FITTINGS BETWEEN DUCTILE IRON PIPE SHALL BE RESTRAINED WITH MEGALUG FITTINGS AS MANUFACTURED BY EBAA IRON, INC. OR APPROVED EQUAL.
13. WET WELL EXCAVATION METHODS SHALL BE SUBMITTED TO THE CITY FOR APPROVAL.
14. CONTRACTOR SHALL SUBMIT ORIGINAL SHOP DRAWINGS SIGNED AND SEALED BY AN ENGINEER REGISTERED IN THE STATE OF TEXAS FOR THE STRUCTURAL CALCULATIONS ASSOCIATED WITH THE PRECAST CONCRETE WET WELL AND TOP.

EQUIPMENT/FITTING LIST

MARK	DESCRIPTION	QUANTITY
A	SUBMERSIBLE PUMP	2
B	6" – 90° BEND	2
C	6" – SWING CHECK VALVE	2
D	6" – RESILIENT SEAT GATE VALVE	3
E	6"x6" – WYE	3
F	6" – TAPPED FLANGE w/ 6" MALE CAM-LOCK FITTING AND CAP	1
G	6" – 45° BEND	2
H	8" – RESTRAINED COUPLING ADAPTER	1
I	8"x6" FLANGE CONCENTRIC REDUCER	1
J	8" STAINLESS STEEL VENT PIPE w/ STAINLESS STEEL SCREEN COVER	1
K	3'x3' ALUMINUM SINGLE LEAF ACCESS HATCH	3
L	10'x7' ALUMINUM DOUBLE LEAF ACCESS HATCH	1
M	ADJUSTABLE PIPE SADDLE SUPPORT	2
N	LATERAL PIPE SUPPORT	4
O	6" BLIND FLANGE	3
P	6" – RESTRAINED COUPLING ADAPTER	2

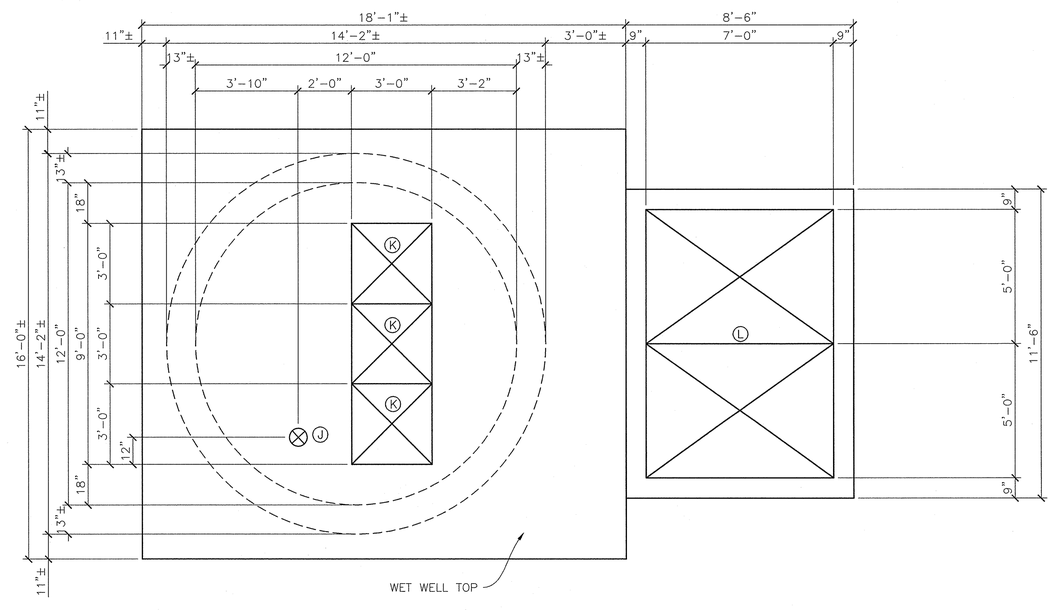

2 LIFT STATION ROOF PLAN

SCALE: 3/8" = 1'

No.	REVISIONS	DATE	BY

Kimley-Horn and Associates, Inc.
© 2012 KIMLEY-HORN AND ASSOCIATES, INC.
TEXAS REGISTERED ENGINEERING FIRM F-928
2800 SOUTH TEXAS AVENUE, SUITE 201
BRYAN, TX 77842
PHONE: 979-775-9595 FAX: 979-775-9599
WWW.KIMLEY-HORN.COM

STATE OF TEXAS
V. RYAN SOWA
91171
REGISTERED PROFESSIONAL ENGINEER
01/07/13

KHA PROJECT	061271612
DATE	JANUARY 2013
SCALE	AS SHOWN
DESIGNED BY	VRS
DRAWN BY	ABC
CHECKED BY	MJM

LIFT STATION DETAILS (SHEET 1 OF 2)

BIO-CORRIDOR INFRASTRUCTURE
PREPARED FOR
CITY OF BRYAN
TEXAS

SHEET NUMBER
C9

Plotted By:Chavero, Denyce Sheet Set:Kha Layout:C10 Lift Station Details (Sheet 1 of 2) January 03, 2013 02:51:16pm K:\SNA_Utilities\061271612\CAD\SHEETS\C_LSDets.dwg
This document, together with the concepts and designs presented herein, as an instrument of service, is intended only for the specific purpose and client for which it was prepared. Reuse of and improper reliance on this document without written authorization and adaptation by Kimley-Horn and Associates, Inc. shall be without liability to Kimley-Horn and Associates, Inc.

Plotted By:Chavero, Denyce Sheet Set:Kha Layout:C11 Lift Station Details (Sheet 2 of 2) January 03, 2013 02:51:21pm K:\SNA_Utilities\061271612\CAD\SHEETS\C-LSDets.dwg
This document, together with the concepts and designs presented herein, as an instrument of service, is intended only for the specific purpose and client for which it was prepared. Reuse of and improper reliance on this document without written authorization and adaptation by Kimley-Horn and Associates, Inc. shall be without liability to Kimley-Horn and Associates, Inc.

EQUIPMENT/FITTING LIST

MARK	DESCRIPTION	QUANTITY
A	SUBMERSIBLE PUMP	2
B	6" – 90° BEND	2
C	6" – SWING CHECK VALVE	2
D	6" – RESILIENT SEAT GATE VALVE	3
E	6"x6" – WYE	3
F	6" – TAPPED FLANGE w/ 6" MALE CAM-LOCK FITTING AND CAP	1
G	6" – 45° BEND	2
H	8" – RESTRAINED COUPLING ADAPTER	1
I	8"x6" FLANGE CONCENTRIC REDUCER	1
J	8" STAINLESS STEEL VENT PIPE w/ STAINLESS STEEL SCREEN COVER	1
K	3'x3' ALUMINUM SINGLE LEAF ACCESS HATCH	3
L	10'x7' ALUMINUM DOUBLE LEAF ACCESS HATCH	1
M	ADJUSTABLE PIPE SADDLE SUPPORT	2
N	LATERAL PIPE SUPPORT AT 4' INTERVALS	4
O	6" BLIND FLANGE	3
P	6" – RESTRAINED COUPLING ADAPTER	2

SEE GENERAL NOTES – SHEET C9

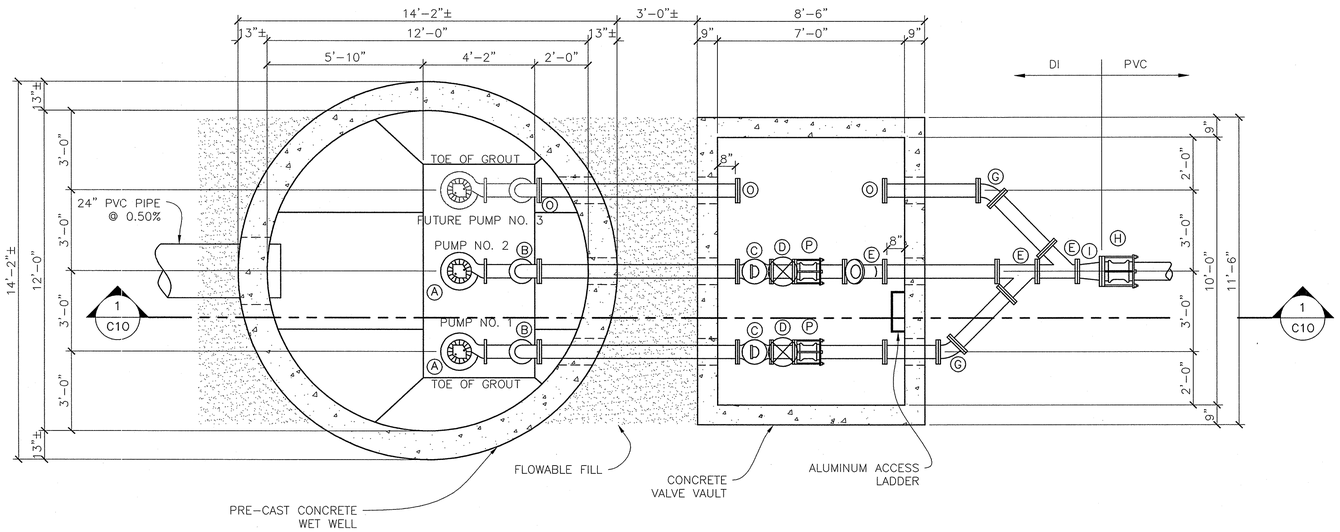

LIFT STATION PLAN

1

SCALE: 3/8" = 1'

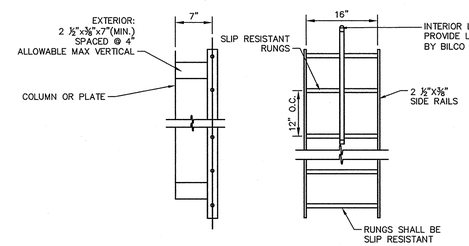

NOTES:
1. CONTRACTOR TO VERIFY ALL LENGTHS AND DIMENSIONS PRIOR TO FABRICATION TO INSURE 7" MIN. TOE CLEARANCE FROM CENTER OF RUNGS TO VAULT WALL.
2. THE FIRST RUNG OFF THE VAULT FLOOR SHALL BE INSTALLED 12" (FROM CENTER OF RUNG) ABOVE THE FINISHED FLOOR ELEVATION.
3. LADDERS WITHIN VAULTS SHALL HAVE BILCO MODEL NO. 1 (OR EQUAL) LADDER UP SAFETY POST AT HATCH OPENING.

VAULT INTERIOR LADDER DETAIL

4

SCALE: N.T.S.

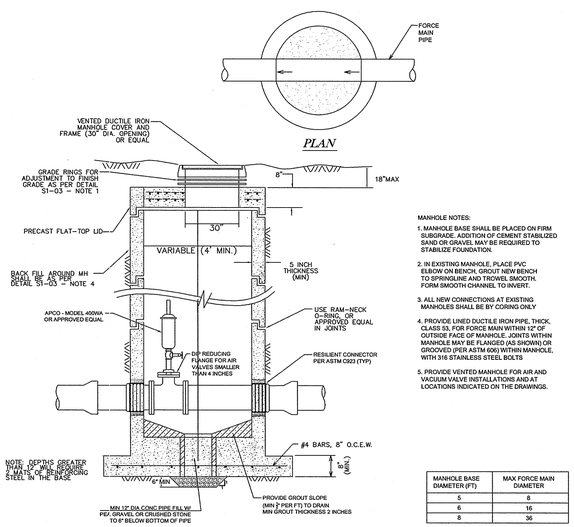

MANHOLE NOTES:
1. MANHOLE BASE SHALL BE PLACED ON FIRM SUBGRADE. ADDITION OF CEMENT STABILIZED SAND OR GRAVEL MAY BE REQUIRED TO STABILIZE FOUNDATION.
2. IN EXISTING MANHOLE, PLACE PVC ELBOW ON BENCH, GROUT NEW BENCH TO SPRINGLINE AND TROWEL SMOOTH. FORM SMOOTH CHANNEL TO INVERT.
3. ALL NEW CONNECTIONS AT EXISTING MANHOLES SHALL BE BY CORING ONLY
4. PROVIDE LINED DUCTILE IRON PIPE, THICK. CLASS 53, FOR FORCE MAIN WITHIN 12" OF OUTSIDE FACE OF MANHOLE. JOINTS WITHIN MANHOLE MAY BE FLANGED (AS SHOWN) OR GROOVED (PER ASTM 606) WITHIN MANHOLE, WITH 316 STAINLESS STEEL BOLTS
5. PROVIDE VENTED MANHOLE FOR AIR AND VACUUM VALVE INSTALLATIONS AND AT LOCATIONS INDICATED ON THE DRAWINGS.

MANHOLE BASE DIAMETER (FT)	MAX FORCE MAIN DIAMETER
5	8
6	16
8	36

AIR RELEASE OR AIR VACUUM RELEASE VALVE MANHOLE

S2-01

COMBINATION AIR VALVE DETAIL

2

SCALE: N.T.S.

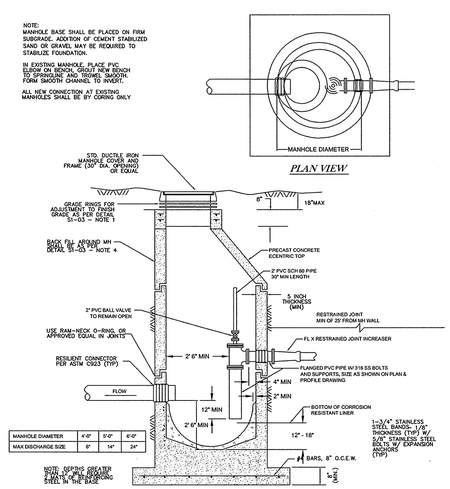

MANHOLE DIAMETER	4'-0"	5'-0"	6'-0"
MAX DISCHARGE SIZE	6"	14"	24"

CORROSION RESISTANT MANHOLE FOR FORCE MAIN DISCHARGE

S2-02

FORCE MAIN DISCHARGE MANHOLE DETAIL

3

SCALE: N.T.S.

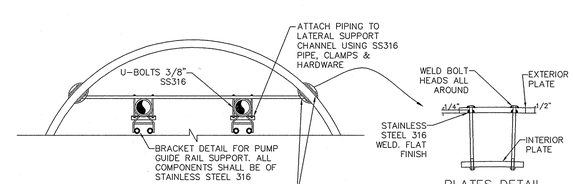

LATERAL SUPPORT UNISTRUT 316SS CHANNEL WELDED TO 6" X 6" X 1/2" SS316 PLATES. BEND PLATES TO MATCH WET WELL CURVATURE. MOUNT TO WET WELL WALL USING 2 – 3/8" X 6" LONG TYPE SS316 BOLTS. SET 1/2" NEOPRENE GASKET ON WET WELL WALL SURFACES IN SIKA 1A (OR EQUAL) SEALANT, BOTH INTERIOR AND EXTERIOR WET WELL WALLS. SEE NOTE #7 FOR PROPER SIZING OF THE STRUT, PLATES AND BOLTS

NOTE: ALL NUTS SHALL BE LOCK-NUTS

LATERAL SUPPORT UNISTRUT CHANNEL SIZING TABLE:

PIPE SIZE	STRUT SIZE	PLATE SIZE	BOLT SIZE
4" & 6"	2.5" X 2.5"	6" X 6"	3/8"
8" & 10"	4" X 4"	8" X 8"	3/8"
12" & 14"	6" X 6"	10" X 10"	5/8"
16" & 18"	8" X 8"	12" X 12"	5/8"
20" & 24"	12" X 12"	18" X 18"	3/4"

WET WELL PIPE SUPPORT DETAIL

5

SCALE: N.T.S.

No.	REVISIONS	DATE	BY

Kimley-Horn and Associates, Inc.
© 2012 KIMLEY-HORN AND ASSOCIATES, INC.
TEXAS REGISTERED ENGINEERING FIRM F-928
2600 SOUTH TEXAS AVENUE, SUITE 201
BRYAN, TX 77842
PHONE: 979-775-9595 FAX: 979-775-9599
WWW.KIMLEY-HORN.COM

STATE OF TEXAS
V. RYAN SOWA
91171
REGISTERED PROFESSIONAL ENGINEER
01/07/13

KHA PROJECT	061271612
DATE	JANUARY 2013
SCALE	AS SHOWN
DESIGNED BY	VRS
DRAWN BY	ABC
CHECKED BY	MJM

LIFT STATION DETAILS (SHEET 2 OF 2)

BIO-CORRIDOR INFRASTRUCTURE
PREPARED FOR
CITY OF BRYAN
TEXAS

SHEET NUMBER
C10

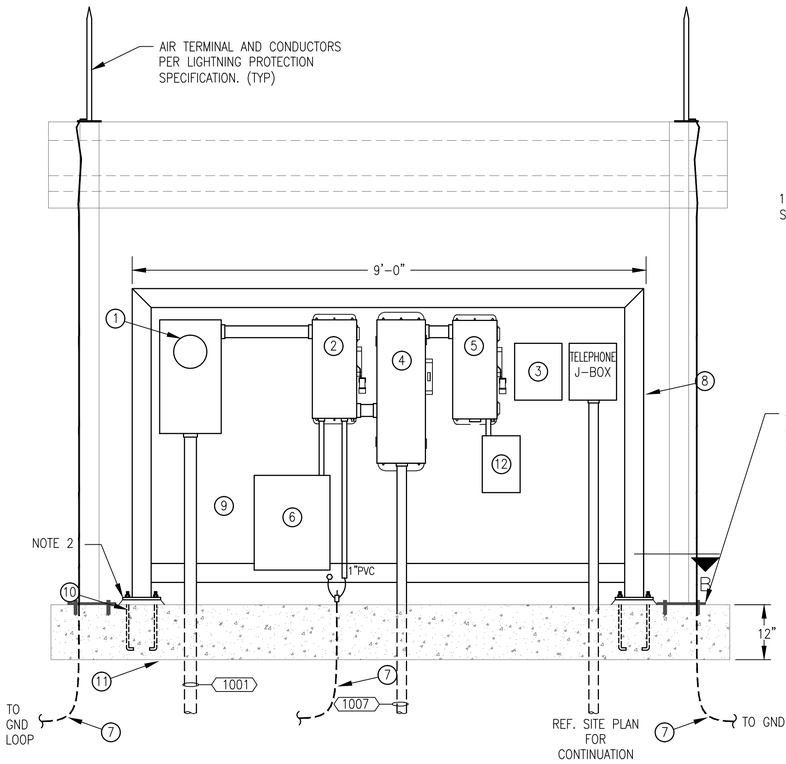

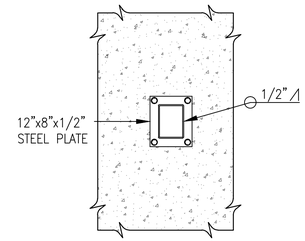

SECTION "B"

3/8" THICK PLATE WELDED TO 4"X4" STEEL POST AND BOLTED TO CONCRETE SLAB

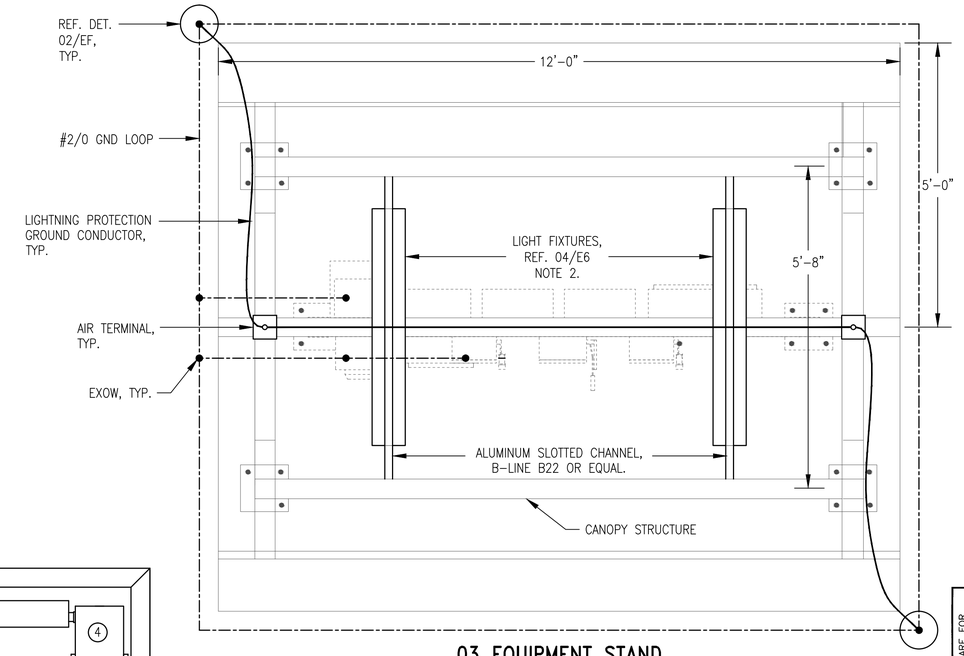

03 EQUIPMENT STAND

TOP VIEW

0 2 4

SCALE IN FEET

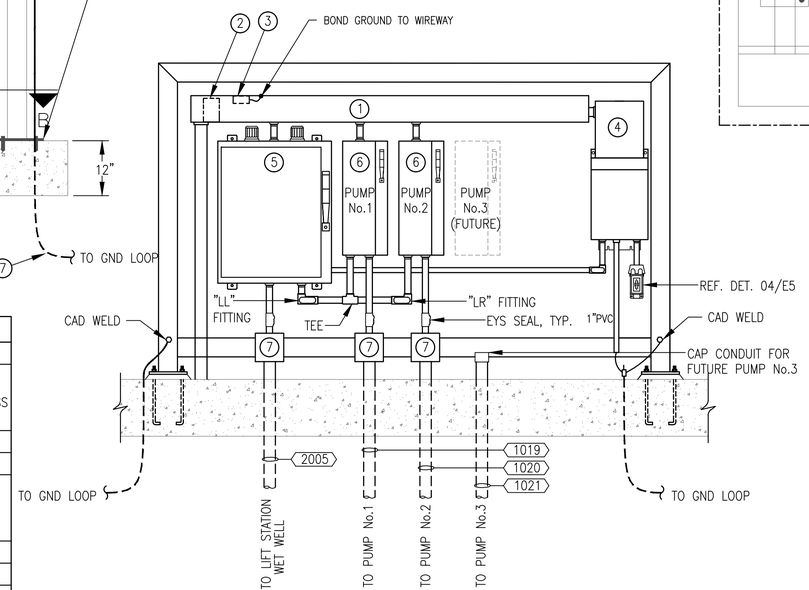

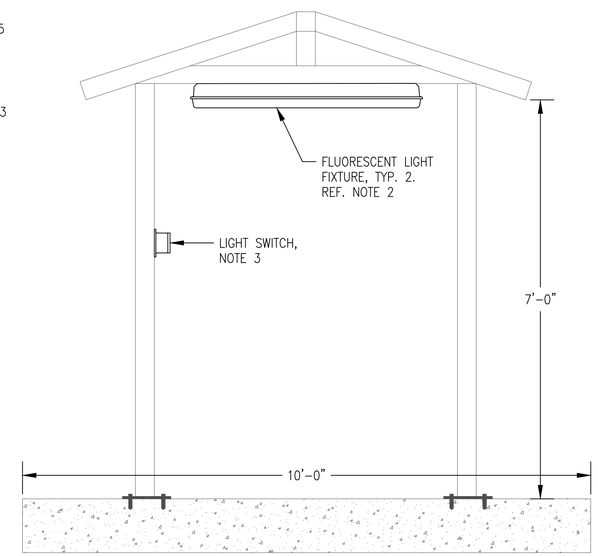

TAG	DESCRIPTION
1	UTILITY METER SOCKET
2	UTILITY MAIN – SERVICE ENTRANCE RATED 480V, 4W (3 BLADES & FUSE HOLDERS, 1-S/N) 100A HEAVY DUTY NEMA 4X VISIBLE BLADE, LOCKABLE SAFETY SWITCH WITH 70A FRS-R BUSSMAN FUSES, GROUNDING LUG, LOCK-ON PROVISION & SOLID NEUTRAL. SQUARE D CLASS 3110 H363DS-GL-VW, H100SN, SPLO, CLR, H125 OR EQUAL.
3	AUTODIALER
4	MANUAL TRANSFER SWITCH, SQUARE D MODEL #DTU363DS
5	GENERATOR MAIN – 480V, 4W (3 BLADES & FUSE HOLDERS, 1-S/N) 100A HEAVY DUTY NEMA 4X VISIBLE BLADE, LOCKABLE SAFETY SWITCH WITH 70A FRS-R BUSSMAN FUSES, GROUNDING LUG, LOCK-ON PROVISION & SOLID NEUTRAL. SQUARE D CLASS 3110 H363DS-GL-VW, H100SN, SPLO, CLR, H125 OR EQUAL.
6	SPD. FURNISH LEA MODEL SP200-277/480-3Y
7	#2/0G TO GND LOOP
8	8"x4" STEEL RECTANGULAR TUBING FRAME. SEE NOTE 1
9	3/8" STEEL BACK PANEL. SEE NOTE 1
10	1/2"x8" HOT DIPPED GALVANIZED ANCHOR BOLTS W/ STAINLESS STEEL NUTS, FLAT WASHERS AND LOCK WASHERS. TYPICAL FOR 8.
11	REINFORCED CONCRETE PAD. REF. CIVIL.
12	100A GENERATOR RECEPTACLE

NOTES:
1. EQUIPMENT STAND SHALL BE HOT DIPPED GALVANIZED AFTER FABRICATION.
2. FILL WITH NON-SHRINK GROUT AFTER LEVELING.
3. EQUIPMENT SHALL BE NEMA 4X 316 STAINLESS STEEL.
4. WIREWAY, COMBINATION TRANSFORMER/ PANEL SHALL BE NEMA 4X 316 STAINLESS STEEL.
5. ALL CONDUIT CONNECTORS SHALL BE NEMA 4X MEYERS HUB.
6. BOND ALL METAL PARTS TO GROUND CONDUCTOR.
7. REFER TO CONDUIT & CABLE SCHEDULE FOR ALL CONDUIT & WIRING BETWEEN ENCLOSURES.

01 EQUIPMENT STAND

BACK

0 2 4

SCALE IN FEET

TAG	DESCRIPTION
1	6" X 6" X 60" WIREWAY NEMA 3R HOFFMAN #A-6660RT
2	POWER DIST. BLOCK ILSCO #PDB-112-350-3
3	POWER DIST. BLOCKILSCO #PDB-112-350-1
4	10 KVA COMBINATION TRANSFORMER/ PANEL, NEMA 3R STN/STL. SQUARE D MINI POWER ZONE MPZ10S40F OR EQUAL
5	30"x24"x8" PUMP CONTROL PANEL, REF. DET. 01/E4.
6	SIZE 1 FVNR COMBINATION STARTER IN NEMA 4X STN/STL ENCLOSURE. SQUARE D CLASS 8539 OR EQUAL.
7	6"x6"x4" NEMA 4X STN/STL TERMINAL BOX.

NOTES:
1. SEAL ALL CONDUITS FROM WET WELL WITH ELECTRICIAN'S FOAM.
2. WIREWAY, COMBINATION TRANSFORMER/ PANEL, INSTRUMENT CABINET AND PUMP CONTROL PANEL SHALL BE NEMA 4X 316 STAINLESS STEEL.
3. CANOPY NOT SHOWN FOR CLARITY.
4. REFER TO CONDUIT & CABLE SCHEDULE FOR ALL CONDUIT & WIRING BETWEEN ENCLOSURES.

02 EQUIPMENT STAND

FRONT

0 2 4

SCALE IN FEET

NOTES:
1. EQUIPMENT RACK NOT SHOWN FOR CLARITY.
2. FURNISH AND INSTALL TWO WATERTIGHT FULLY ENCLOSED TWO LAMP FLUORESCENT LIGHT FIXTURES AS SHOWN. FIXTURES SHALL BE SURFACE MOUNTED AND SWITCHED. PROVIDE H.E. WILLIAMS #92-4-254THH-PC-WET/1-SS LATCH-EB2-120 OR APPROVED EQUAL.
3. MOUNT LIGHT SWITCH ON CANOPY SUPPORT STRUCTURE. SWITCH SHALL BE MOUNTED IN FS BOX W/ WEATHERPROOF COVER, 54" ABOVE FINISHED FLOOR.

04 EQUIPMENT STAND

SIDE VIEW

0 2 4

SCALE IN FEET

THESE DOCUMENTS ARE FOR INTERIM REVIEW, ESTIMATION, AND PERMIT PURPOSES.

DATE: 9-19-2012
McCRACKEN & ASSOCIATES, INC.
Consulting Engineers
Dallas, Texas
FIRM No. F-338

No.	REVISIONS	DATE	BY

Kimley-Horn and Associates, Inc.

© 2012 KIMLEY-HORN AND ASSOCIATES, INC.
TEXAS REGISTERED ENGINEERING FIRM F-928
2800 SOUTH TEXAS AVENUE, SUITE 201
BRYAN, TEXAS 77802
PHONE: 979-775-9595 FAX: 979-775-9599
WWW.KIMLEY-HORN.COM

STATE OF TEXAS
JOSEPH J. KOTRLA
56361
REGISTERED PROFESSIONAL ENGINEER

KHA PROJECT	061271612
DATE	AUGUST 2012
SCALE	AS SHOWN
DESIGNED BY	JJK
DRAWN BY	TWB
CHECKED BY	JJK

ELECTRICAL
DETAILS SHEET II

BIO-CORRIDOR INFRASTRUCTURE
PREPARED FOR
CITY OF BRYAN
TEXAS

SHEET NUMBER
E6

Plotted By:Richard Brady Sheet Set:Kha Layout:Model September 19, 2012 04:06:33pm Z:\02.073\Dwg\2012_0919 Sealed\DWG\E6 Detail Sheet II.dwg
This document, together with the concepts and designs presented herein, as an instrument of service, is intended only for the specific purpose and client for which it was prepared. Reuse of and improper reliance on this document without written authorization and adaptation by Kimley-Horn and Associates, Inc. shall be without liability to Kimley-Horn and Associates, Inc.