Bleyl & Associates

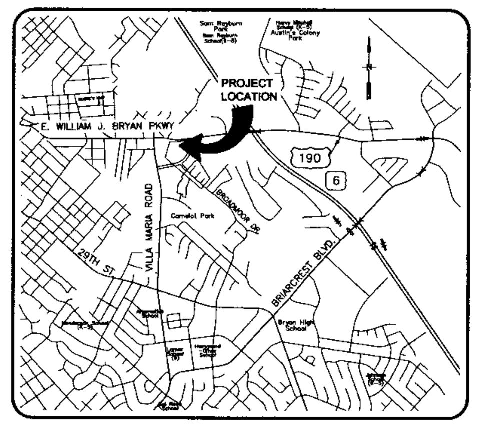

VICINITY MAP

NOT TO SCALE

SYMBOL LEGEND

EXISTING

- SANITRY SWR MANHOLE
- FIRE HYDRANT
- PIPELINE MARKER
- TPED

PROPOSED

- STORM SEWER GRATE INLET
- SAN SEW CLEANOUT
- STORM SEWER INLET
- Water Meter

SIGNAGE LEGEND

(1) DO NOT ENTER — R5–1 (30 x 30 in) — DO NOT ENTER SIGN

N

0 15 30 60 120

SCALE: 1"=30'

LINE LEGEND

EXISTING

- CONTOUR
- EX. STM SEW LINE
- EX. SIDEWALK

PROPOSED

- CONTOUR
- CONSTRUCTION EXIT
- WASHOUT AREA
- PROP SAN SEWER LINE
- PROP SIDEWALK
- PROP WATER LINE
- PROP STM SEW LINE

PARKING	
PARKING REQUIRED	
BUILDING GFA	7,019 SF
PARKING REQ'D/GFA	1/500
TOTAL SPACES REQUIRED	15
PARKING PROVIDED	
PROP STANDARD SPACES	29
PROP. ACCESSIBLE SPACES	2
TOTAL SPACES PROVIDED	31

PARKING ANALYSIS:

1. CAR WASH IS FULLY AUTOMATED. CUSTOMERS DO NOT PARK AND EXIT VEHICLES TO GO TO BUILDING. THERE ARE NO FULL TIME EMPLOYEES. THEREFORE ONLY 2 PARKING SPACES ARE PROVIDED FOR OWNER OR OWNERS'S ASSOCIATE TO CHECK ON OPERATIONS OF FACILITY.

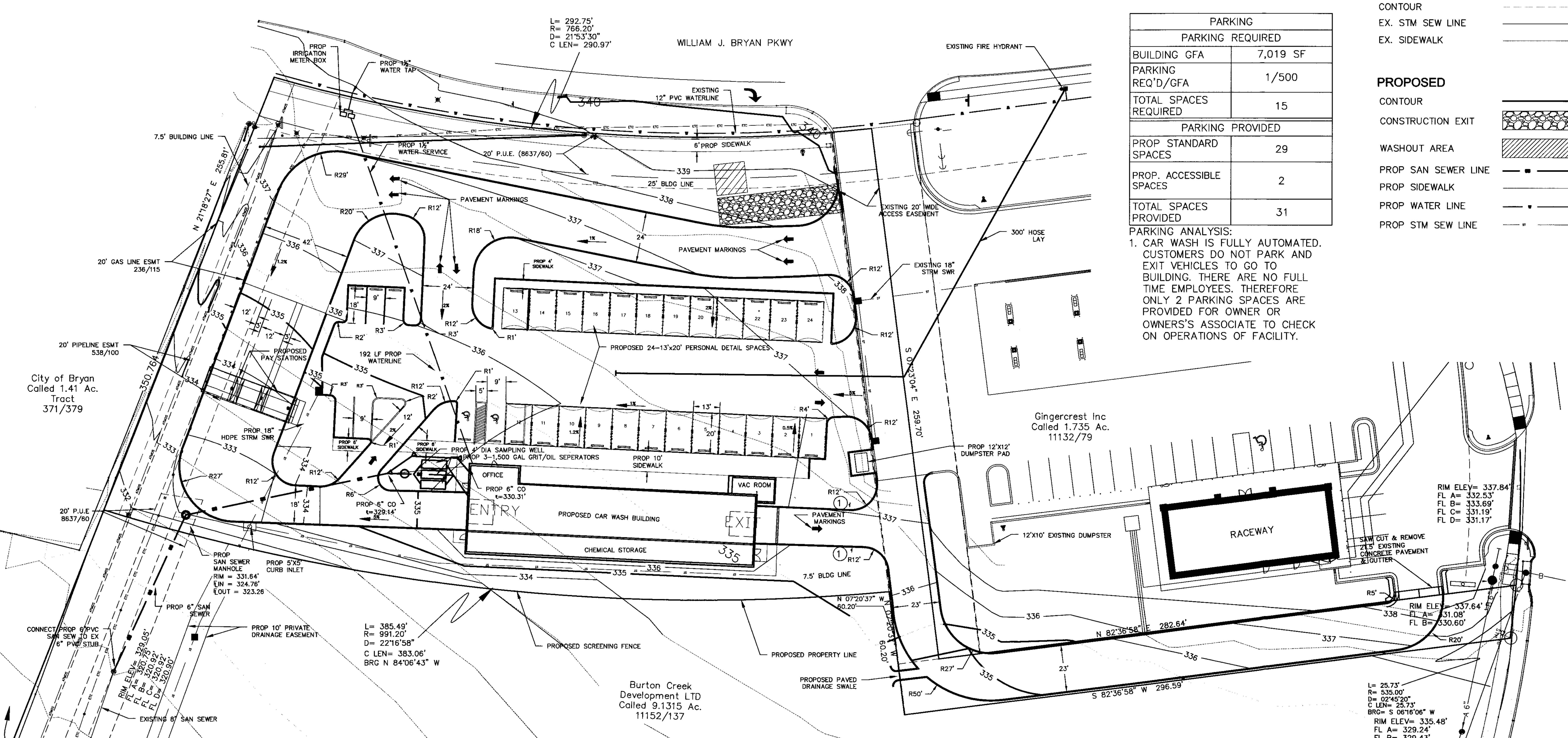

DUMPSTER DETAIL

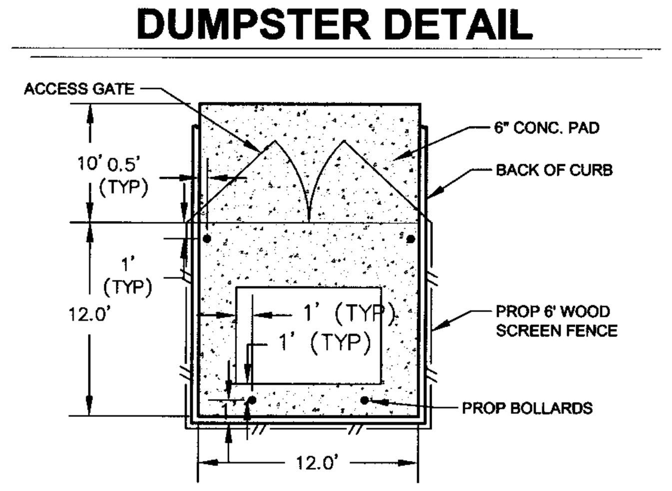

NOTE: DUMPSTER CONTAINMENT AREAS SHALL USE 8" CONCRETE, REINFORCED WITH #5 BARS AT 12" OCEW.

PAY STATION

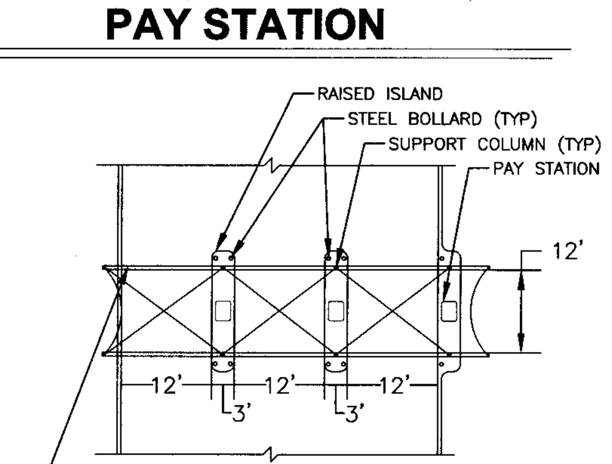

CANTILEVERED CANVAS COVER ON METAL FRAMING WITH LED LIGHTING. APPROXIMATE AREA 615 SF. MIN HEIGHT 12'

DETAIL SPACE

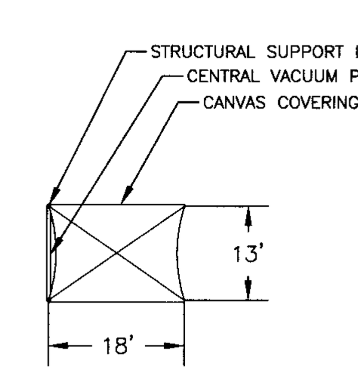

DETAIL STATION COVER APPROXIMATE AREA 234 SF MINIMUM HEIGHT 9'

CARWASH BUILDING DATA	
BUILDING HEIGHT	23 FT
CARWASH BLDG SF	7019 SF
CARWASH BUILDING FINISH FLOOR ELEVATION	336.48 FT

SUBJECT PROPERTY DATA	
OWNER	BURTON CREEK DEVELOPMENT LTD
BUYER	DAVID BORSKI
PARCEL AREA	1.99 ACRES
EXISTING ZONING	C–3 COMMERCIAL

NOTES:

1. PROPERTY LIES WITHIN FM 158 CORRIDOR OVERLAY DISTRICT.
2. THE CONTRACTOR SHALL BE RESPONSIBLE FOR THE CONTAINMENT AND PROPER DISPOSAL OF ALL LIQUID AND SOLID WASTE ASSOCIATED WITH THE PROJECT.
3. DEMOLITION/CONSTRUCTION WASTE–SITE IS REQUIRED TO PROVIDE CONTAINMENT FOR WASTE PRIOR TO AND DURING DEMOLITION/CONSTRUCTION. SOLID WASTE ROLL OFF BOXES AND/OR METAL DUMPSTERS SHALL BE SUPPLIED BY CITY OR CITY PERMITTED CONTRACTOR(S) ONLY.
4. IRRIGATION SYSTEM–POTABLE WATER SUPPLY MUST BE PROTECTED BY EITHER AN ATMOSPHERIC OR PRESSURE VACUUM BREAKER OR TESTABLE DOUBLE CHECK VALVE ASSEMBLY, AND INSTALLED AS PER CITY ORDINANCE.
4. POTABLE WATER PROTECTION–ALL DEVICES, APPURTENANCES, APPLIANCES AND APPARATUS INTENDED TO SERVE SOME SPECIAL FUNCTION AND THAT CONNECTS TO THE WATER SUPPLY SYSTEM, SHALL BE PROVIDED WITH PROTECTION AGAINST BACKFLOW AND CONTAMINATION, OF THE WATER SUPPLY SYSTEM.
5. SIGNAGE WILL BE PERMITTED SEPARATELY.

REV	DATE	BY	APP	COMMENT
4				
3				
2				
1				

SCALE: AS SHOWN
DATE: October 1, 2014
DRAWN BY: KGN
PROJECT MANAGER: DAVID L. BESLY, P.E.

PREPARED FOR:
DAVID BORSKI
1606 S. TEXAS AVE. BRYAN, TX. 77802
mydentmagic@yahoo.com

Bleyl & Associates
Project Engineering & Management
1722 BROADMOOR, STE. 210
BRYAN, TEXAS 77802
(979) 268-1125 PHONE
(979) 260-3849 FAX
100 NUGENT STREET
CONROE, TEXAS 77301
(936) 441-7833 PHONE
(936) 760-3833 FAX
TEXAS BOARD of PROFESSIONAL ENGINEERS: F-678

SITE PLAN

CAR WASH ON WJB

BRIAR MEADOWS CREEK PH3, LOT 1-RB

2103 EAST WMJ BRYAN PKWY, BRYAN
BRAZOS COUNTY, TEXAS

STATE OF TEXAS
DAVID L. BESLY
81873
LICENSED
PROFESSIONAL ENGINEER

10-1-2014

PROJECT NUMBER
11402

FILE NAME:

SHEET: 01 OF: 03

Z:\11400\11402 CAR WASH ON WJB\CD-11402\11402 - SITE\LAYOUT2 10/1/2014 11:34 AM DAVID OLF

Bleyl & Associates

Development Services
OCT 01 2014