ELECTRIC SERVICE: (SEE SHEET E4.0)
3 PHASE
208 Volt
501.7 KW
1392.6 Amp

NOTICE:
CONTRACTOR TO PROVIDE CONSTRUCTION SITE NOTICE TO CITY AS REQUIRED BY CITY OF BRYAN.

NOTICE:
LANDSCAPE PLAN MAY SHOW PLANTS IN CONFLICT WITH FIRE HYDRANT OR OTHER ITEMS. PLANTING WILL BE ADJUSTED TO AVOID CONFLICT.

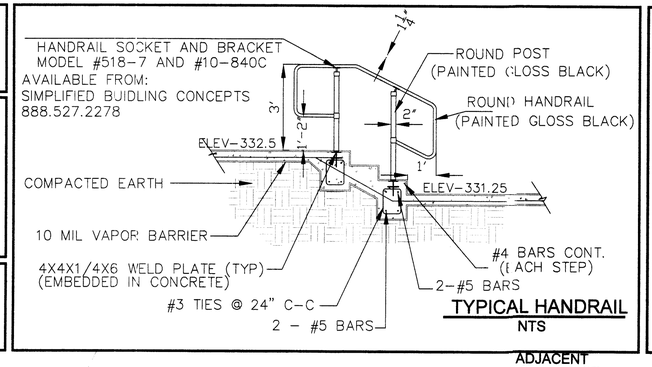

TYPICAL HANDRAIL
NTS

LEGEND:
- (10) PARKING SPACE COUNT
- "GREEN" – LIVE LANDSCAPE AREA
- [6] ITEM IDENTIFICATION MARK
- PAINTED HANDICAP PARKING MARKER
- HANDICAP PARKING SIGN
- PAINTED CROSSWALK
- UNDERGROUND STORM DRAIN
- PROPERTY LINE
- EASEMENT LINE
- BUILDING SETBACK LINE
- NEW CITY WATER MAIN
- PRIVATE WATER MAIN
- STORMWATER INLET BOX
- HC SIDEWALK RAMP
- FIRELANE — PAINTED FIRELANE LINE
- 6' CEDAR WOOD FENCE
- BRICK PAVING

IDENTIFICATION MARKERS:
1. NEW CONCRETE PAVING
2. NEW STREET DRIVEWAYS (3) AS DETAILED THESE DRAWINGS
3. BRICK PAVING
4. PAINTED WALKWAY
5. CONCRETE SIDEWALK
6. SIDEWALK HC RAMP (ADA STANDARDS/ 1:12 SLOPE MAX)
7. 6" CONCRETE CURB (TYPICAL)
8. HC PARKING SIGN (Sign To Designate "VAN SPACE")
9. PAINTED FIRELANE MARKING ACCORDING TO CITY DETAILS
10. TRASH ENCLOSURE (TO MEET CITY REQUIREMENTS)
11. 6' CEDAR FENCE
12. CONCRETE RETAINING WALL (12'W X10'DEEP)
13. 2.5" COPPER WATER SERVICE LINE IN 4" PVC CONDUIT
14. 6" PRIVATE PVC SAN SEWER DRAIN LINE
15. U.G. POWER SERVICE
16. ELECT. TRANSFORMER PAD
17. TELEPHONE SERVICE CONDUIT. CONTRACTOR TO FURNISH AND INSTALL REQUIRED PVC CONDUIT W/ PULL STRING. STUBBED UP NEAR ELECTRICAL TRANSFORMER PAD.
18. 8" CITY OF BRYAN WATER MAIN

PROJECT: "GENERATIONS"
CONSTRUCT NEW SENIOR SERVICES AND PHYSICAL REHABILITATION CENTER

ADDRESS:
2817 KENT STREET (To Be Confirmed By City)
BRYAN, TEXAS

LOCATION:
NE QUADRANT OF MEMORIAL DRIVE AND KENT STREET INTERSECTION
BRYAN, TEXAS

LEGAL DESCRIPTION:
4.3 ACRE, W. TYLER MOORE, JR & JOHN C. CULPEPPER, III TRACT
REPLATTED AS LOT 2, BLOCK1 - SHERWOOD #1 SUBDIVISION (4.29Ac)

OWNER:
SHERWOOD REAL PROPERTY, G.P.
1700 GEORGE BUSH EAST.
SUITE 240
COLLEGE STATION, TEXAS 77840

SITE INFORMATION:
- MISCELLANEOUS BUILDING DATA:
  PROPOSED NUMBER of STORIES: 1
  ROOF OVERHANG: VARIES
  BUILDING FLOOR AREA THIS LOT: 49,670sf
  FINISH FLOOR ELEVATION: MAIN BLDG=332.00 – LAUNDRY BLDG=331.25.
  EXTERIOR FINISH: BRICK VENEER (SEE ARCHITECTURAL PLAN)
- SITE AREA:
  TOTAL LOT AREA: 4.29acres
- SITE ZONING:
  C-1, OFFICE DISTRICT
- FLOODPLAIN:
  NONE OF THIS PROPOSED DEVELOPMENT IS LOCATED WITHIN THE 100 YEAR FLOODPLAIN AS DEFINED BY FEMA MAP #48041C0142 C DATED JULY 1992
- STORM WATER DRAINAGE:
  ON SITE STORM WATER TO BE SURFACE DRAINED VIA NEW PRIVATE U.G STORM-WATER COLLECTION SYSTEM. ALL DRAINAGE STAYS WITHIN THIS PROPERTY PRIOR TO DISCHARGE INTO THE EXISTING CITY U.G. STORM DRAINAGE SYSTEM. SOME ADJACENT PROPERTY DRAINAGE IS RECEIVED ALONG THE NORTH AND EAST DEVELOPMENT LINES INTO THIS TRACT FOR DRAINAGE THROUGH THE NEW SYSTEM. NONE OF THE INCOMING FLOW IS IMPEDED, THEREBY RESULTING IN NO STORMWATER DEPTH INCREASE ON UPSTREAM PROPERTY.
  STORMWATER DETENTION CONTROL IS PROVIDED ACCORDING TO CITY OF BRYAN REQUIREMENTS.
- SITE GRADING & DRAINAGE:
  DRAINAGE CONTOURS AND BUILDING ELEVATIONS SHOWN BY SHEET C1.5
  U.G. DRAINAGE INLETS AND PIPE DESIGNED IN COMPLIANCE WITH CITY OF BRYAN STREET REQUIREMENTS.
- FIRE PROTECTION:
  FIRE SPRINKLER SYSTEM INCLUDED IN BUILDING.
  FIRE HYDRANT LOCATIONS SHOWN THIS SHEET
  FIRE HOSE LAY- WITHIN CITY LENGTH REQUIREMENTS
  FIRE LANE MARKING SHOWN THIS SHEET TO BE PAINTED ACCORDING TO CITY OF BRYAN STANDARDS
  FIRE TRUCK ACCESS PROVIDED AROUND ENTIRE BUILDING AREA BY STREET DRIVEWAY ACCESS AND BY ON SITE DRIVEWAY CONFIGURATION.
- PARKING:
  PARKING SPACES REQUIRED (CITY OF BRYAN) @ 1/5BEDS (124 BEDS) = 25 PARKING SPACES REQUIRED (CITY OF BRYAN) @ 1/DAYTIME EMPLOYEE= 75 =100
  PARKING SPACES REQUIRED (STATE AGENCY) THIS LOT @ 1/4 BEDS = 31
  PARKING SPACES AVAILABLE THIS LOT = 94
  HC PARKING (VAN) PROVIDED = 6
- LANDSCAPING:
  SITE LANDSCAPING TO MEET CITY REQUIREMENTS AS SHOWN BY DRAWINGS HEREWITH
- SITE LIGHTING:
  SITE LIGHTING BY EXTERIOR BUILDING LIGHTS. PLACEMENT AS SHOWN BY ARCHITECTURAL PLANS.
- ELECTRIC POWER AND TELEPHONE:
  ELECTRIC POWER / PHONE SERVICES AVAILABLE AT ADJACENT MEMORIAL DRIVE. PRIMARY SERVICE TO BE EXTENDED UNDERGROUND TO TRANSFORMER ADJACENT TO KITCHEN WING, AT CENTER/NORTH END OF THE BUILDING.
- WATER AND SEWER:
  WATER SERVICE (FOR BUILDING & FIRE PROTECTION) TO BE PROVIDED VIA
  > NEW 8" CITY WATER MAIN TO FH (IN CITY EASEMENT);
  > AND 8" PRIVATE FIRELINE TO FIRE SYSTEM RISER AS ROUTED THIS SHEET;
  > AND 2.5" COPPER DOMESTIC LINE AS ROUTED THIS SHEET.
  SANITARY SEWER SERVICE TO BE PROVIDED BY 6" PVC LINE FROM THE NORTH END OF THE BUILDING TO EXISTING CITY SAN. SEWER MAIN ALONG MEMORIAL DRIVE.
- COMMUNICATIONS CABLE
  COMMUNICATIONS/TV CABLES TO BE BY OWNER AS ARRANGED WITH SUPPLIERS.
- OFFSITE IMPROVEMENTS
  NO OFFSITE/RIGHT-OF-WAY IMPROVEMENTS INCLUDED IN THIS PROPOSAL.
- SIGNAGE
  COMMERCIAL SIGNAGE TO BE ACCORDING TO CITY SIGN ORDINANCES. PERMITING WILL BE APPLIED FOR BY SIGN CONSTRUCTION CONTRACTOR.
- SOLID WASTE DISPOSAL
  WASTE DISPOSAL VIA TRASH DUMPSTER LOCATED AS SHOWN THIS SHEET. DUMPSTER DISPOSAL BY CITY SANITATION SERVICES.
  MEDICAL/CHEMICAL/HAZARDOUS WASTE DISPOSAL BY CONTRACT WITH AUTHORIZED AND LICENSED WASTE DISPOSAL SERVICE PROVIDERS.
- HANDICAPPED ACCESSIBILITY
  HANDICAPPED ACCESSIBILITY REQUIREMENTS ADHERED TO IN APPLICABLE AREAS.

UTILITIES SUMMARY:
- ELECTRIC POWER REQUIRED
  1600 AMP, 208/3 PHASE
  U.G. PRIMARY SERVICE TO PAD MOUNTED TRANSFORMER BOX LOCATED NEAR NORTH END OF BUILDING KITCHEN WING
  U.G. PVC CONDUIT AND PULL LINE TO BE PROVIDED BY GENERAL CONTRACTOR TO MEET REQUIREMENTS OF POWER COMPANY.
- COMMUNICATIONS SERVICE
  TELEPHONE ADJACENT TO ELECTRIC POWER TRANSFORMER
  TV CABLE CONNECTIONS AS REQUIRED BY CABLE SERVICE COMPANY TO BE PROVIDED BY GENERAL CONTRACTOR
- DOMESTIC WATER SUPPLY
  2.5" COPPER DOMESTIC LINE IN 4" PVC SCHED 40 SLEEVE.
  1.5" COPPER IRRIGATION LINE IN 4" PVC SCHED 40 SLEEVE.
  METERS (2), TAPS (2), LINES, SLEEVES TO BE PROVIDED, INSTALLED AND PAID FOR BY GENERAL CONTRACTOR.
- SANITARY SEWER SERVICE
  6" LINE @ 6' BELOW FLOOR ELEV AT BUILDING LINE
  PRIVATE SEWER LINE AND CITY MAIN CONNECTION TO BE PROVIDED BY GENERAL CONTRACTOR
- EXISTING SANITARY SEWER
  THERE ARE NO EXISTING SS LINES ATTACHED TO CITY LINES ALONG THE PROPERTY LINE OF THIS DEVELOPMENT TRACT. UNDER SLAB LINES FOR BLDG. TO BE DEMOLISHED ALL DRAIN THE SEWER DRAIN OF THE MAIN BLDG THAT IS TO REMAIN.
- NATURAL GAS SERVICE
  2" SERVICE LINE & METER AT NORTH SIDE OF REHAB WING.
  228'-2" SERVICE EXTENSION FROM METER TO CENTER WING ENTRANCE AS SHOWN BY THIS PLAN.
  GENERAL CONTRACTOR TO COORDINATE WITH GAS COMPANY AND PROVIDE ALL MATERIALS AND INSTALLATION FOR A COMPLETE OPERATING GAS SYSTEM
- CONSTRUCTION CONCRETE WASHOUT SITE
  SINCE PROJECT IS TO BE COMPLETED IN PHASES, MORE THAN ONE TRUCK WASHOUT LOCATION MAY BE USED. SHADED AREAS SHOWN THIS PLAN ARE THE GENERAL LOCATIONS, BUT OTHERS MAY BE CONSIDERED FOR WASHOUT WITH CONFIRMATION OF ENGINEER.
  ALL CONCRETE WASHOUT SHALL BE CLEANED UP AND PROPERLY DISPOSED OF PRIOR TO CONSTRUCTION OF IMPROVEMENTS IN THOSE AREAS.

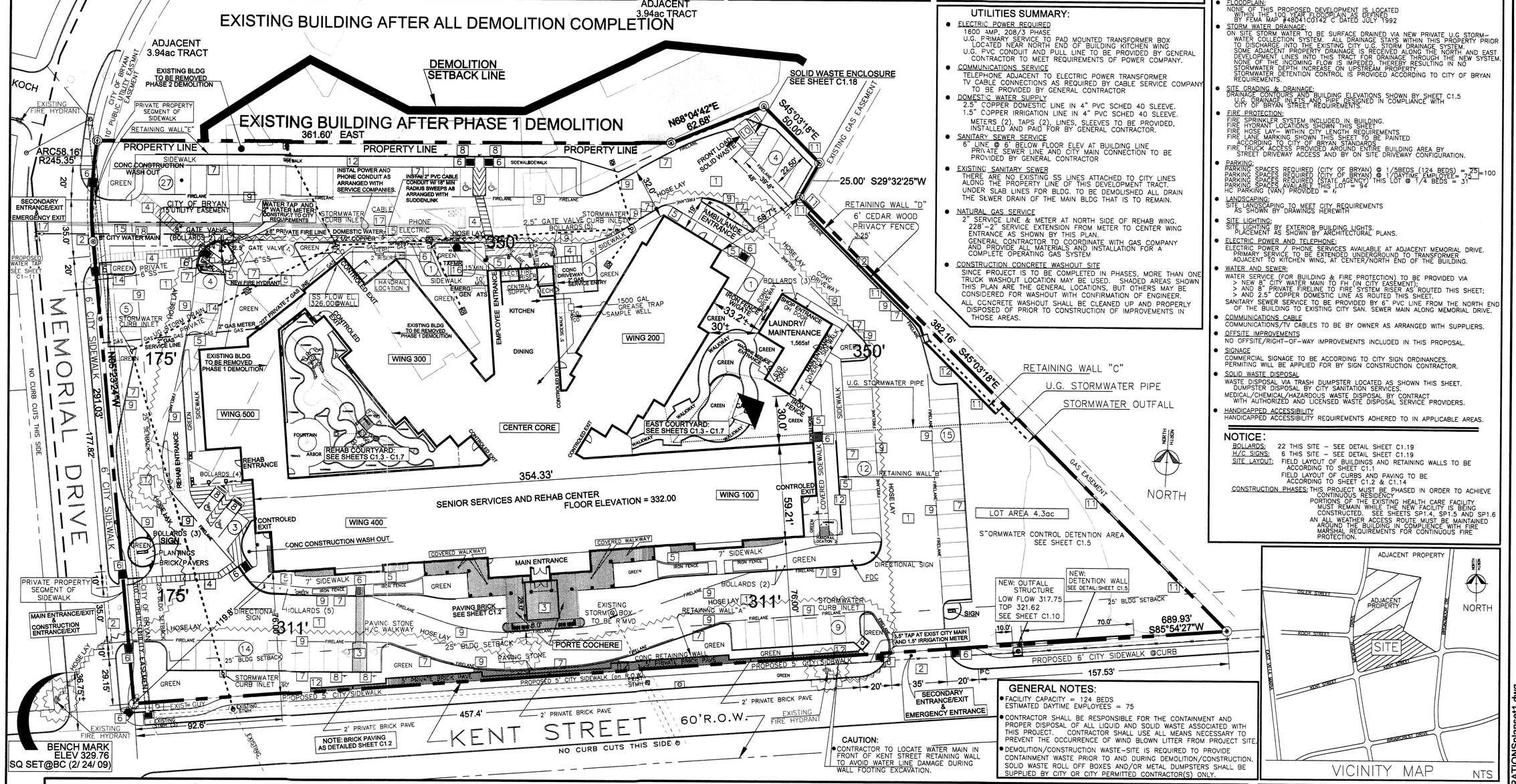

GENERAL NOTES:
- FACILITY CAPACITY = 124 BEDS
  ESTIMATED DAYTIME EMPLOYEES = 75
- CONTRACTOR SHALL BE RESPONSIBLE FOR THE CONTAINMENT AND PROPER DISPOSAL OF ALL LIQUID AND SOLID WASTE ASSOCIATED WITH THIS PROJECT. CONTRACTOR SHALL USE ALL MEANS NECESSARY TO PREVENT THE OCCURRENCE OF WIND BLOWN LITTER FROM PROJECT SITE.
- DEMOLITION/CONSTRUCTION WASTE-SITE IS REQUIRED TO PROVIDE CONTAINMENT WASTE PRIOR TO AND DURING DEMOLITION/CONSTRUCTION. SOLID WASTE ROLL OFF BOXES AND/OR METAL DUMPSTERS SHALL BE SUPPLIED BY CITY OR CITY PERMITTED CONTRACTOR(S) ONLY.

CAUTION:
- CONTRACTOR TO LOCATE WATER MAIN IN FRONT OF KENT STREET RETAINING WALL TO AVOID WATER LINE DAMAGE DURING WALL FOOTING EXCAVATION.

NOTICE:
BOLLARDS: 22 THIS SITE – SEE DETAIL SHEET C1.19
H/C SIGNS: 6 THIS SITE – SEE DETAIL SHEET C1.19
SITE LAYOUT: FIELD LAYOUT OF BUILDINGS AND RETAINING WALLS TO BE ACCORDING TO SHEET C1.1
FIELD LAYOUT OF CURBS AND PAVING TO BE ACCORDING TO SHEET C1.2 & C1.14
CONSTRUCTION PHASES: THIS PROJECT MUST BE PHASED IN ORDER TO ACHIEVE CONTINUOUS RESIDENCY
PORTIONS OF THE EXISTING HEALTH CARE FACILITY MUST REMAIN WHILE THE NEW FACILITY IS BEING CONSTRUCTED. SEE SHEETS SP1.4, SP1.5 AND SP1.6
AN ALL WEATHER ACCESS ROUTE MUST BE MAINTAINED AROUND THE BUILDING IN COMPLIENCE WITH FIRE MARSHAL REQUIREMENTS FOR CONTINUOUS FIRE PROTECTION.

SCALE 1"=30' @ 24X36 SHEET
0 15 30 60 90

SITE DEVELOPMENT PLAN

M.L. HAMMONS, PE
1700 George Bush East, College Station Texas 77840
979 696 1444
Fax979 696 3651

M.L. HAMMONS PE
STATE OF TEXAS
M. L. HAMMONS
25308
LICENSED
PROFESSIONAL ENGINEER
F-12806

RELEASE FOR: CITY REVIEW

DEVELOPMENT SITE PLAN
GENERATIONS
CENTER FOR NURSING AND REHABILITATION
BRYAN, TEXAS
KENT STREET

DATE	REVISION
8/28/13	REVISED TO CITY REVIEW OF 8/13/13

DRAWN
CHECKED H
DATE 8 /28 /13
PROJECT NUMBER

2013GENERATIONSplanset1.dwg

SP1.1