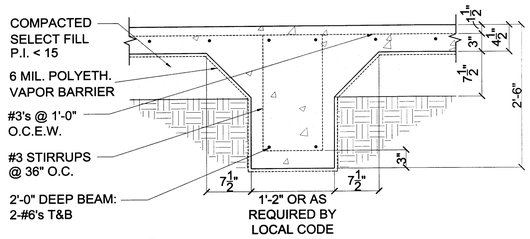

2 INTERIOR BEAM DETAIL
SCALE: 1/2"=1'-0"

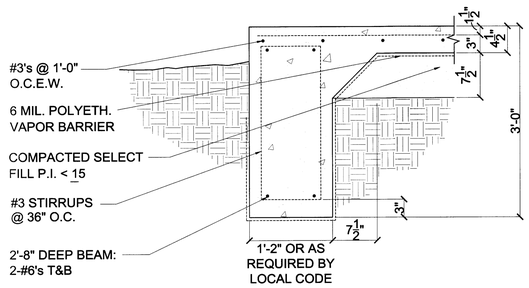

3 PORCH BEAM DETAIL
SCALE: 1/2"=1'-0"

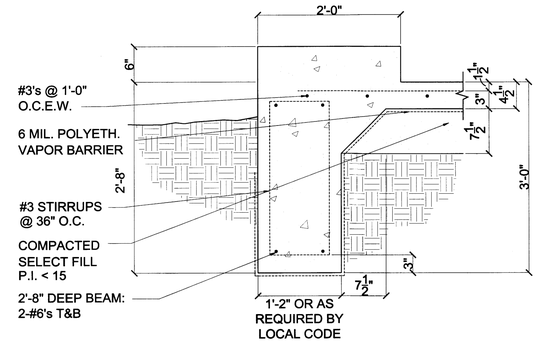

4 EXTERIOR BEAM DETAIL
SCALE: 1/2"=1'-0"

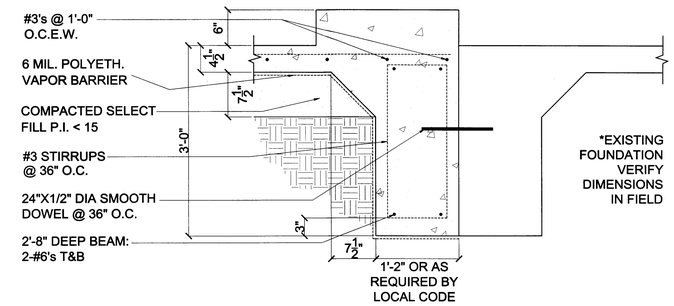

5 EXPANSION JOINT DETAIL
SCALE: 1/2"=1'-0"

FOUNDATION DETAILS

SCALE:1/2" = 1'-0" | 02

THIS DRAWING WAS NOT DESIGNED BY AN ENGINEERING OR AN ARCHITECTURAL FIRM. A LICENSED PROFESSIONAL ENGINEER SHOULD BE CONSULTED REGUARDING STRUCTURAL FRAMING AND FOUNDATION. SHOULD AN ENGINEER'S SEAL BE PRESENT ON THE DRAWING, THEN THE "ENGINEER OF RECORD" SHALL BEAR THE SOLE RESPONSIBILITY FOR THE STRUCTURAL DESIGN. R.A.I. SHALL NOT BE HELD RESPONSIBLE FOR THE STRUCTURAL DESIGN AND/OR ANY PROBLEMS THAT MAY ARISE REGUARDING THE DESIGN.

DEPENDING ON MATERIAL USED BY BUILDER, 5-1/2" BRICK LEDGE MAY BE DELETED IF NEEDED

FOUNDATION CONSTRUCTION

GRADE BEAM EXCAVATIONS SHALL BE PLUMB, NEAT AND THOROUGHLY CLEANED. CONCRETE SHALL BE PLACED IMMEDIATELY AFTER EACH POUR SECTION HAS BEEN PREPARED.

CONCRETE

ALL STRUCTURAL CONCRETE SHALL BE NORMAL-WEIGHT WITH A MINIMUM 28-DAY COMPRESSIVE STRENGTH OF 3,000 PSI. CONCRETE MIX SHALL CONTAIN 5 SACKS OF CEMENT PER CUBIC YARD (MINIMUM) AND 7 GALLONS OF WATER PER SACK OF CEMENT (MINIMUM). ALL CONCRETE WORK SHALL CONFORM TO ACI 318.

CONCRETE

ALL REINFORCING BARS SHALL BE ASTM A615 GRADE 60 (EXCEPT #3 BARS GRADE 40). DETAILING, FABRICATING AND PLACEMENT SHALL CONFORM TO THE ACI DETAILING MANUAL AND ACI 318. LAP CONTINUOUS BARS 40 DIAMETERS AT SPLICES. CONCRETE PROTECTION FOR REINFORCEMENT (COVER) SHALL BE AS FOLLOWS.

2" TOP FOR SLAB ON GRADE
1 1/2" TOP FOR GRADE BEAMS
2" CAST AGAINST FORMS
3" CAST AGAINST SOIL

PROVIDE SUPPORT CHAIRS FOR ALL REINFORCING STEEL INSTALL #5 x 4'-0" L-SHAPED BARS TOP AND BOTTOM IN EXPOSED FACE OF EXTERIOR GRADE BEAM CORNERS.

MISCELLANEOUS

IT SHALL BE THE RESPONSIBILITY OF THE CONTRACTOR TO:
01 EXAMINE ALL DRAWINGS FOR FLOOR ELEVATIONS, CURBS, SLOPES DEPRESSED FLOOR AREAS AND EMBEDDED ITEMS.
02 COMPARE ARCHITECTURAL AND STRUCTURAL SECTIONS AND REPORT ALL DISCREPANCIES TO THE DESIGNER PRIOR TO FABRICATING OR INSTALLING STRUCTURAL WORK.
03 VERIFY DIMENSIONS PRIOR TO STARTING WORK.

THESE DRAWINGS DO NOT INCLUDE ALL COMPONENTS NOR PROCEDURES NECESSARY FOR CONSTRUCTION SAFETY, SUCH ITEMS ARE THE RESPONSIBILITY OF THE CONTRACTOR.

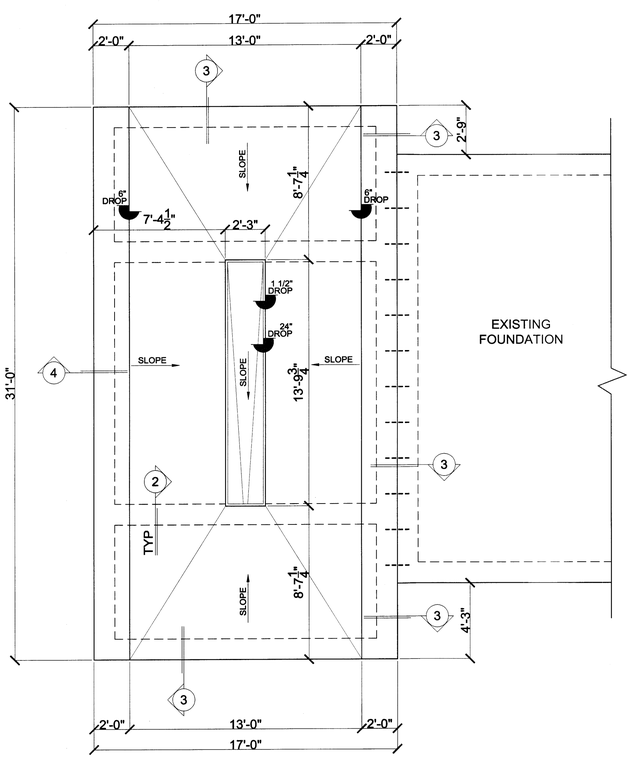

FOUNDATION PLAN & NOTES

SCALE:1/4" = 1'-0" | 03

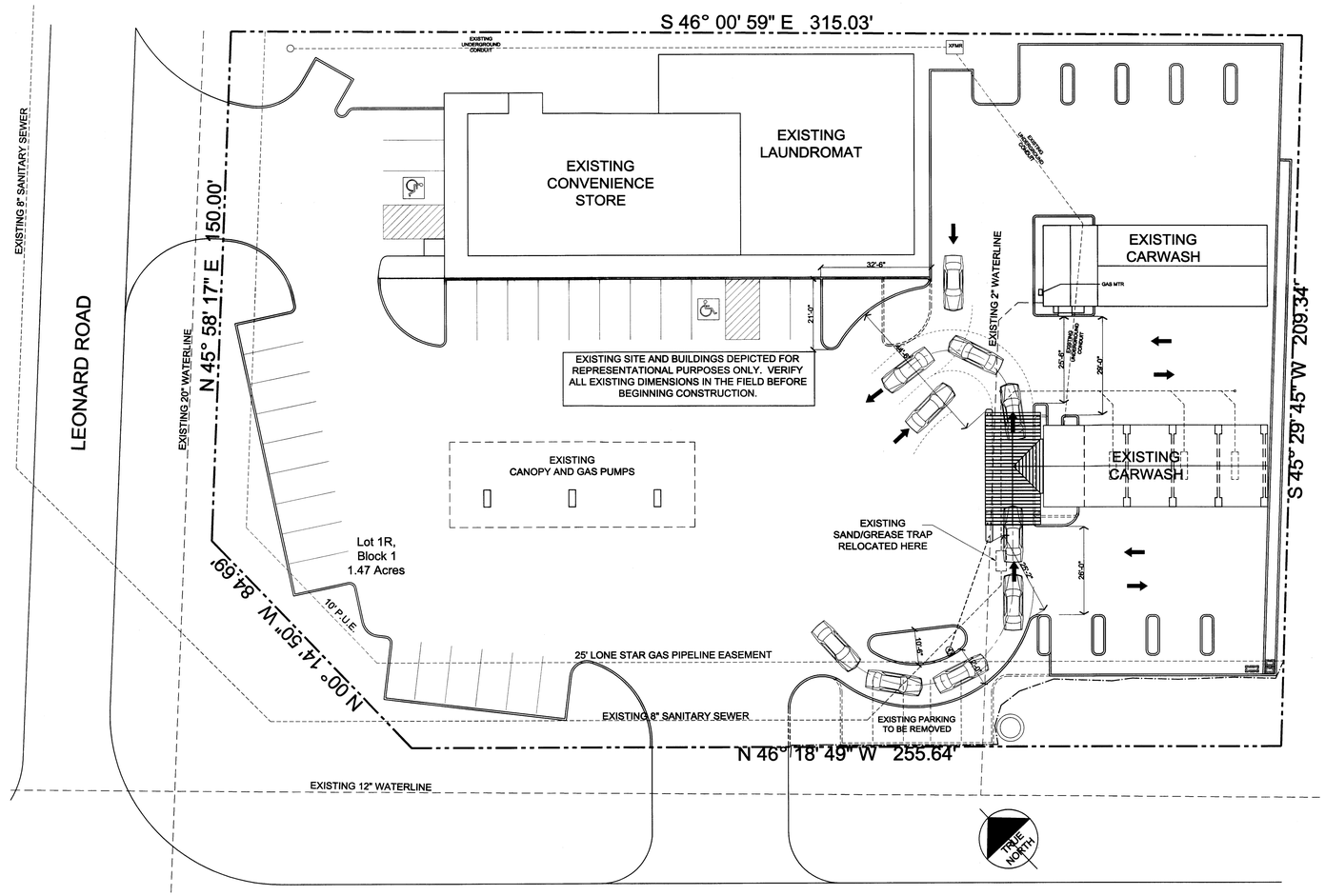

SITE PLAN

SCALE: | 02

Received
JAN 27 2009
Development & Engineering Services

© COPYRIGHT 2009 BY R.A.I.

(877) 690-CADD
(2233)
4500 Carter Creek Dr. #203
Bryan, TX 77802
www.raidesigns.com

R.A.I. DESIGNS, INC.

JOB# 08-059
AUTO-CARWASH

DIAMOND "C" CONSTRUCTION

01-14-09	JTR-PLAN SET COMPLETED

SHEET: A-1 OF TWO
DATE: 01-14-09