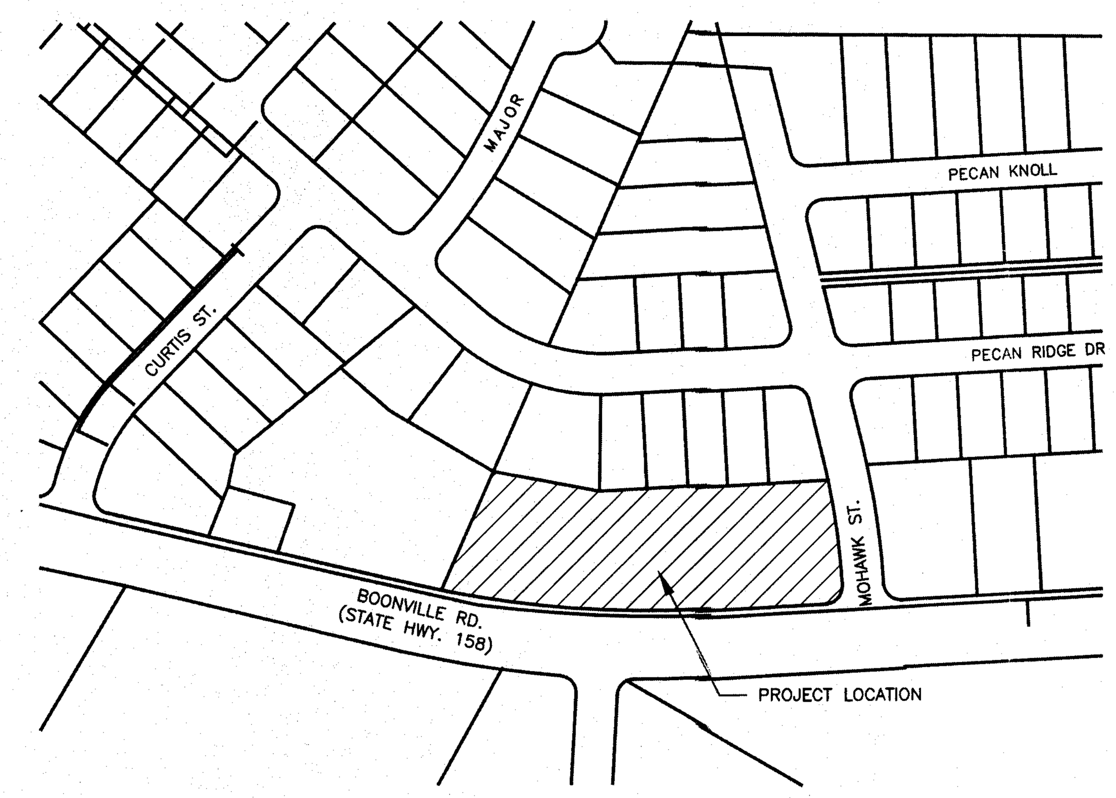

VICINITY MAP
N.T.S.

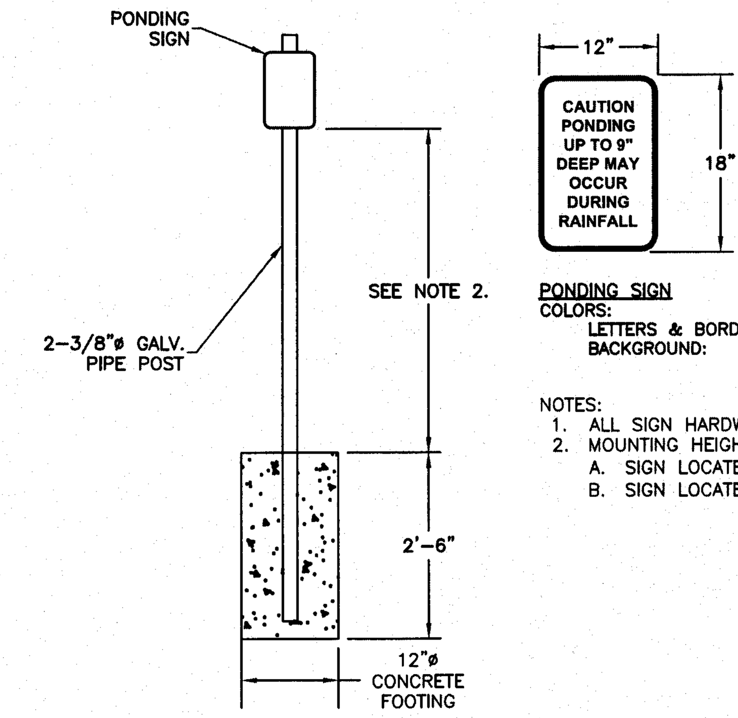

PONDING SIGN
COLORS:
LETTERS & BORDER: RED
BACKGROUND: WHITE

NOTES:
1. ALL SIGN HARDWARE TO BE GALVANIZED.
2. MOUNTING HEIGHT SHALL BE AS FOLLOWS:
A. SIGN LOCATED IN GRASS OR PLANTING: 6'-3"
B. SIGN LOCATED IN PAVEMENT/PARKING LOT: 6'-3"

PONDING SIGN DETAIL
SCALE: N.T.S.

ABBREVIATIONS

BC	BUILDING CORNER	±	PLUS OR MINUS
BM	BENCHMARK	PC	POINT OF CURVATURE
CFS	CUBIC FEET PER SECOND	PRC	POINT OF REVERSE CURVATURE
℄	CENTERLINE	PCC	POINT OF COMPOUND CURVATURE
CMP	CORRUGATED METAL PIPE	ℙ	PROPERTY LINE
CONC.	CONCRETE	PROP.	PROPOSED
Δ	DELTA	PT	POINT OF TANGENCY
ø	DIAMETER	P..E.	PUBLIC DRAINAGE EASEMENT
DIA	DIAMETER	P.U.E.	PUBLIC UTILITY EASEMENT
DIP	DUCTILE IRON PIPE	PVC	POLYVINYL CHLORIDE
ELEV.	ELEVATION	R	RADIUS
E.O.P.	EDGE OF PAVEMENT	R.O.W.	RIGHT OF WAY
EX.	EXISTING	SD	STORM DRAIN
F.F	FINISHED FLOOR	SF	SQUARE FEET
F.H.	FIRE HYDRANT	SS	SEWER SERVICE
℄	FLOW LINE	S.Y.	SQUARE YARD
FT.	FOOT (FEET)	STA.	STATION
GALV.	GALVANIZED	STD.	STANDARD
H.P.	HIGH POINT	SW	SIDEWALK
HGL	HYDRAULIC GRADE LINE	TBM.	TEMPORARY BENCHMARK
IN.	INCH	TC	TOP OF CURB
L.F.	LINEAR FEET	TG	TOP OF GRATE
L.P.	LOW POINT	TI	TOP OF INLET
MH	MANHOLE	TMH	TOP OF MANHOLE
MIN.	MINIMUM	TP	TOP OF PAVEMENT
MISC.	MISCELLANEOUS	TS	TOP OF SIDEWALK
NG	NATURAL GROUND	TEL.	TELEPHONE
N.T.S.	NOT TO SCALE	VPC	VERTICAL POINT OF CURVATURE
OC	ON CENTER	VPI	VERTICAL POINT OF INTERSECTION
OCEW	ON CENTER EACH WAY	VPT	VERTICAL POINT OF TANGENCY
O.D.	OUTSIDE DIAMETER	WS	WATER SERVICE

LEGEND

- Electrical Manhole
- Fire Hydrant
- Gas Manhole
- Gas Meter
- Guy Anchor
- Iron Pipe Found
- Iron Rod Found
- Iron Rod Set
- Light Pole
- Power Pole
- Sewer Clean-Out
- Sewer Manhole
- Sprinkler Head
- Storm Drain Manhole
- Street Sign
- TBM
- Telephone Manhole
- Telephone Pedestal
- Traverse Point
- Water Meter
- Water Valve

SD1.01	Proposed Drainage Structure No.
	Prop. Handicapped Parking Sign
	Inlet Protection
14	Prop. Inlet / Storm Drain
→	Drainage Flow
→ → → →	℄ Drainage Ditch
— P —	Pipeline
— G —	Gas Line
— T —	Telephone Cable
— FO —	Fiber Optics Cable
— OE —	Overhead Electrical Line
— UE —	Underground Electric Line
— UU —	Underground Utilities
— 8S —	Ex. Sewer Line w/ size
— 8S —	Prop. Sewer Line w/ size
— 8W —	Ex. Water Line w/ size
— 8W —	Prop. Waterline & Fire Hydrant
— SF —	Prop. Silt Fence
224	Ex. Ground Contour Line
(224)	Prop. Finish Grade Contour
— // —	Wire Fence
— ◇ —	Chain Link Fence
— o —	Pipe Fence w/ Cable
	Subdivision Boundary
	Prop. R.O.W. Line
	Easement Lines

For Interim Review Only
These documents have been released on July 6, 2011 for the purpose of review and comment under the authority of: J. Dale Browne, Jr. P.E., P.E. No. 81890
They are not to be used for construction purposes.

ISSUED FOR REVIEW AND COMMENT.

DATE: 07/06/11
DRAWN BY: DAO/JDB
DESIGNED BY: DAO/JDB
CHECKED BY: JDB
10170002-007-02

REVISIONS

McCLURE & BROWNE
ENGINEERING/SURVEYING, INC.
Engineer Reg. No. F-458 · Survey Reg. No. 101033-00
1008 Woodcreek Dr., Suite 103
College Station, Tx. 77845 · (979) 693-3838
1314 10th Street, Suite 210
Huntsville, Tx. 77320 · (936) 294-9749
M&B

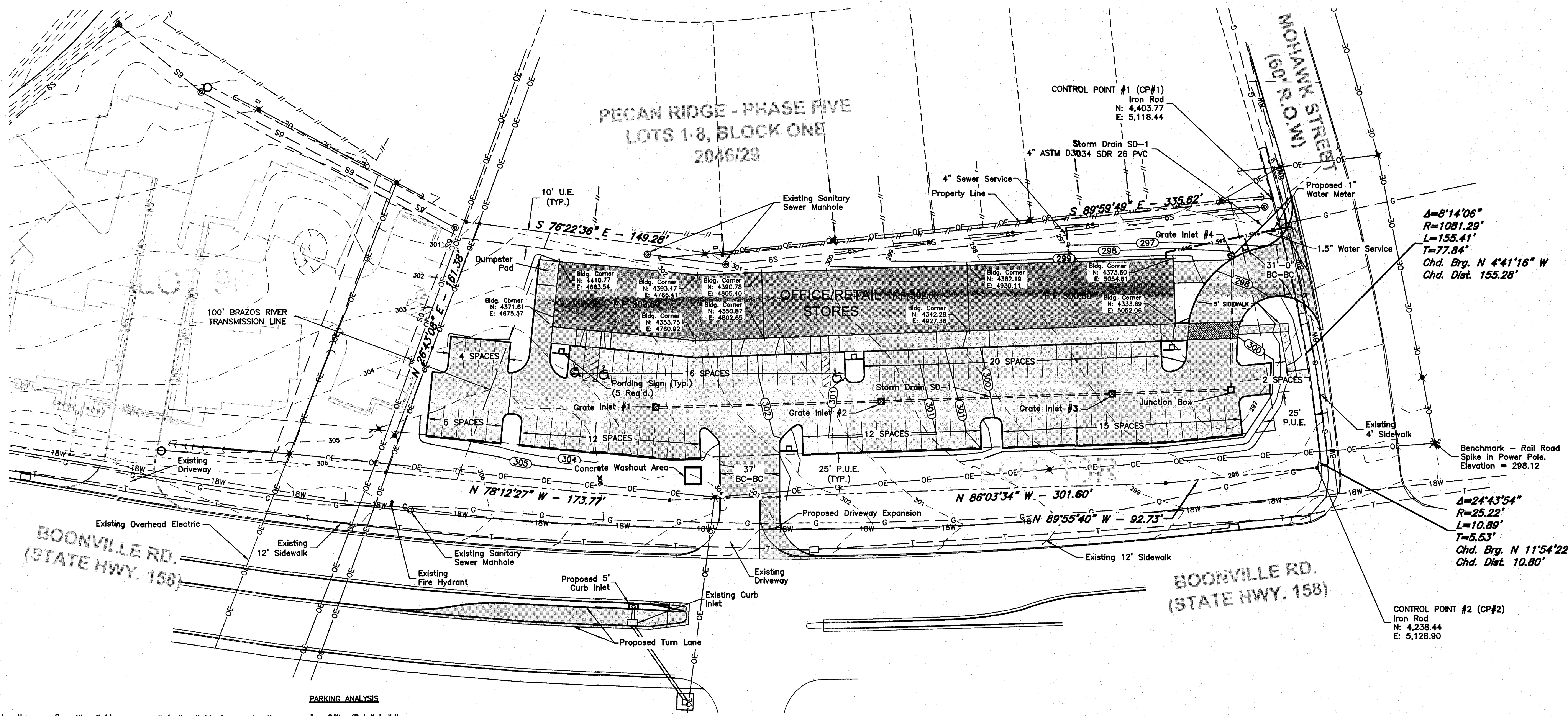

SITE PLAN

SCALE: Hor: 1" = 40'

0 20' 40' 80'

GENERAL NOTES:

1. The Contractor shall be responsible for verifying the location of all existing utilities. At least 48-hours prior to beginning construction, the Contractor shall contact the following, but not limited to:
   A. Dig Tess ☎ 1-800-344-8377
   B. City of Bryan:
   Utility Department (BTU) ☎ 979-822-3777
   Water & Sewer Department ☎ 979-209-5900
2. All construction shall be in accordance with City of Bryan Standard Specifications for Water, Sewer and Street Construction and construction drawings found herein. In the event of conflict between the City of Bryan Standard Specifications and construction drawings, the City's Standards Specifications shall govern. All testing shall be performed in accordance with the City's Standards and shall be the responsibility of the Contractor.
3. Trench safety shall be provided in accordance with O.S.H.A. Standard 29 CFR Part 1926 Subpart P.
4. The Contractor is responsible for ALL construction safety. Construction drawings do not include necessary components for construction safety.
5. Location of existing buried utilities, where shown, is approximated only. Other utilities may be present that are not shown on the construction drawings. The Contractor shall be responsible for locating and protecting all buried utilities.
6. The Contractor is responsible for all storm water pollution prevention associated with this project. The Contractor shall use all means necessary to prevent the transportation of sediment from the project site.
7. All soil disturbed by construction shall be hydromulch seeded.
8. All suitable excess soil (soil suitable for construction purposes as determined by Engineer.) is the property of the Owner. The suitable excess soil used as fill shall be placed in 6" lifts and compacted to 95% standard proctor (ASTM D698) at 2 to 4 percent above optimum moisture. Excess soil that is not suitable for construction shall become the property of the Contractor. The Contractor shall be responsible for the disposal of the material off-site.
9. The Contractor shall obtain written approval from the Engineer for use of substituted construction materials. product data and Engineer's seal (where applicable) shall accompany all requests.
10. A traffic control plan (TCP) shall be developed and maintained by the Contractor while working around traffic areas. The TCP shall be approved by the Engineer before construction starts.
11. Barricades shall be required for all trenches left open overnight that will prevent pedestrian access.
12. All electrical details and parking lot lights to be provided by separate construction documents.
13. Benchmark: Railroad spike in power pole - Elevation= 298.12
14. The Contractor shall be responsible for the containment and proper disposal of all liquid and solid waste associated with this project. The Contractor shall use all means necessary to prevent the occurrence of windblown litter from the project site.
15. Demolition/Construction Waste - Site is required to provide containment for waste prior to and during demolition/construction. Solid waste roll off boxes and/or metal dumpsters shall be supplied by City or City permitted contractor(s) only.

PARKING ANALYSIS

1. Office/Retail building
   A. Building type: Office/Retail building
   B. Building square footage: 17,059 SF
   C. Parking spaces required per square foot: 1 space per 200 SF (Retail)
   D. Parking spaces required for proposed building: 86 spaces
   E. Parking spaces provided: 86
   Regular: 83
   Handicapped: 3

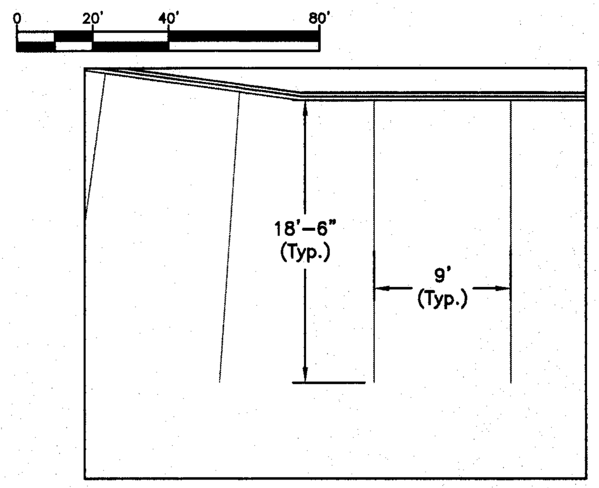

TYPICAL PARKING SPACE DIMENSIONS
SCALE: 1" = 10'

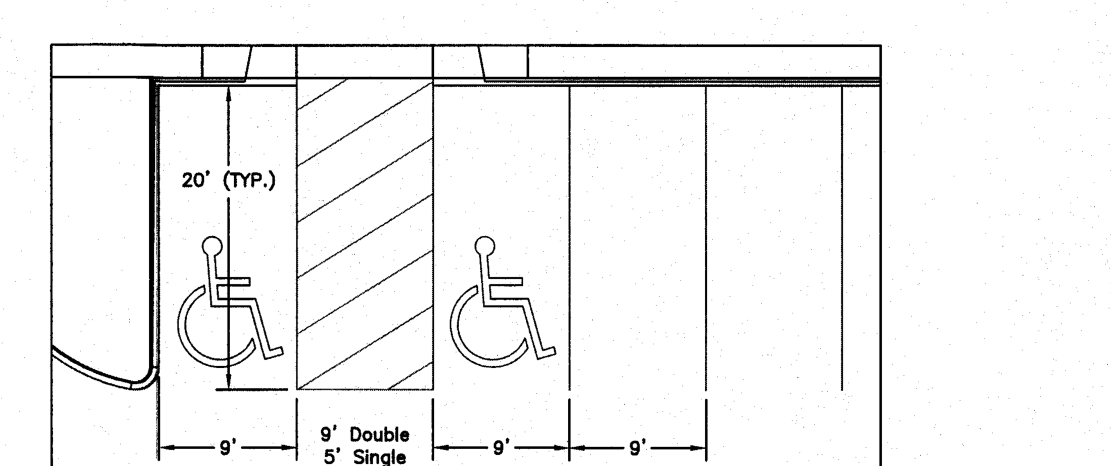

TYPICAL HANDICAP SPACE DIMENSIONS
SCALE: 1" = 10'

PECAN RIDGE, PHASE 5, BLOCK 1 LOT 10R

ZONED: PD-M

1.906 ACRES

REPLAT OF LOTS 9-20
PECAN RIDGE PHASE 5
VOLUME 4670, PAGE 103
BRYAN, BRAZOS COUNTY, TEXAS

RECEIVED
JUL - 6 2011
Development Engineering Services

THESE PLANS DO NOT INCLUDE NECESSARY COMPONENTS FOR CONSTRUCTION SAFETY.

NOTE: LOCATION OF EXISTING BURIED UTILITIES, WHERE SHOWN, IS APPROXIMATE ONLY. THERE MAY EXIST UTILITIES WHICH ARE NOT SHOWN. THE CONTRACTOR SHALL BE RESPONSIBLE FOR THE LOCATION AND PROTECTION OF ALL BURIED UTILITIES.

Site Plan

Pecan Ridge, Phase 5, Lot 10R