Applicable codes:
2009 International Building Code Family; 2009 International Energy Conservation Code; 2011 International Electrical Code; City of Bryan Ordinances, Texas Accessibility Standards.

Project description:
Existing 1 story pre-engineered metal building; 4,911 sf with 862 sf shop addition and 859 sf covered wash bay.

IBC 2009

Construction Type	IIIB	Allows 3 stories and 19,000 sf
Occupant Load	Business (100 sf/occ) Warehouse (500 sf/occ) Shop (500 sf/occ)	1,364 sf / 100 = 14 occupants 1,479 sf / 500 = 3 occupants 2,930 sf / 500 = 6 occupants **Total = 23 occupants**
Toilets	1 / 25 for first 50 occ	2 required; 3 provided
Lavatories	1 / 40 for first 80 occ	2 required; 3 provided

6 CODE REVIEW
Refer to: 1/A2.1 — No Scale

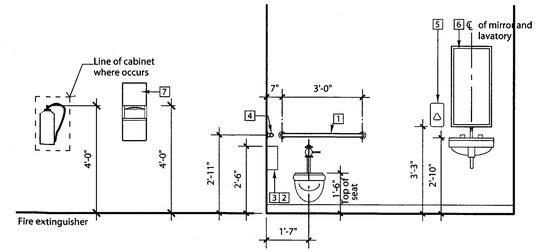

Mount controls for flush valves on wide side of toilet areas at 42" max above floor

Dimensions are to face of studs

1 - Handicapped grab bar Bobrick B-6206x36
2 - Surface-mounted sanitary napkin disposal - Bobrick B-254 (Women's toilet only)
3 - Surface-mounted toilet tissue holder - Bobrick B-288
4 - Handicapped grab bar Bobrick B-6206x42
5 - Soap dispenser; Surface mounted Bobrick 4112
6 - Mirror: Bobrick B290x1836
7 - Paper towel dispenser/trash receptacle: Bobrick B4369

3 MOUNTING HEIGHTS
Refer to: 2/A2.1 — Scale: 3/8"=1'-0"

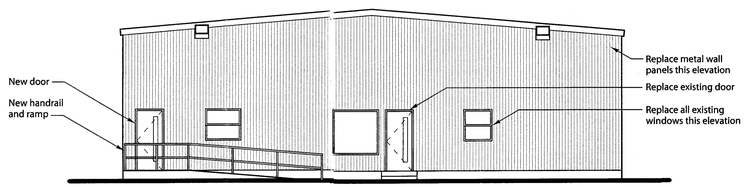

7 ELEVATION
Refer to: 1/A2.1 — Scale: 1/8"=1'-0"

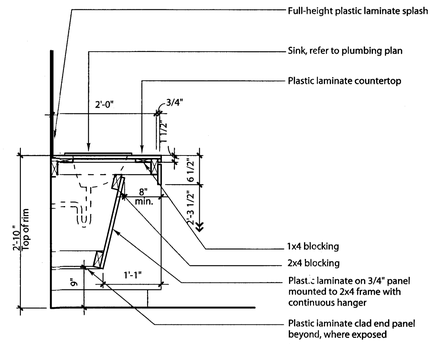

5 SINK SECTION
Refer to: 4/A2.1 — Scale: 3/4"=1'-0"

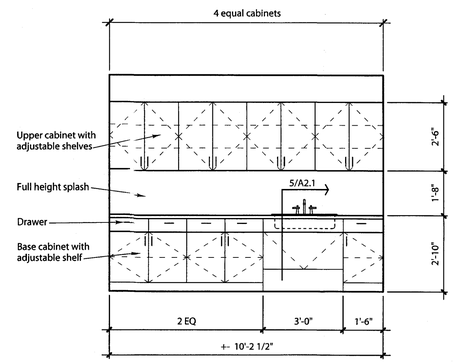

4 BREAKROOM ELEVATION
Refer to: 1/A2.1 — Scale: 3/8"=1'-0"

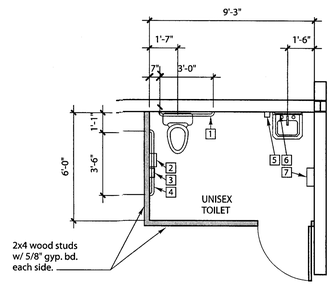

2 ENLARGED FLOOR PLAN
Refer to: 1/A2.1 — Scale: 1/4"=1'-0"

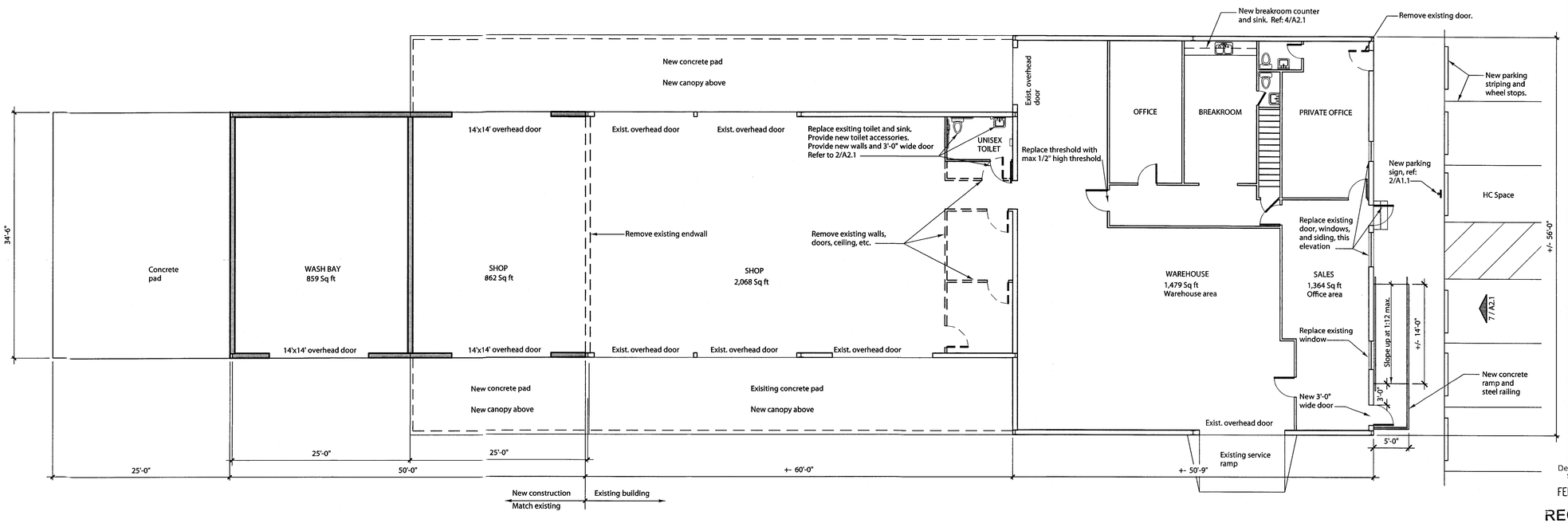

1 FLOOR PLAN
Refer to: Site Plan — Scale: 1/8"=1'-0"

The Arkitex Studio, Inc.
308 N. Bryan Ave.
Bryan, TX 77803
P (979)821-2635
F (979)775-8224
www.arkitex.com

LICENSED ARCHITECT 14078 STATE OF TEXAS
1/27/2014

Renovation and additon forr
Sunstate Equipment
1747 Earl Rudder Freeway, Bryan, Texas 77803

Revisions	
Number	Date
1 - Site review	2/24/2014

Development Services
FEB 25 2014
RECEIVED

Project 1350
February 2014

A2.1