PROJECT BENCHMARK:

1. IT IS THE RESPONSIBILITY OF THE CONTRACTOR TO VERIFY THE EXACT LOCATION OF ALL EXISTING UNDERGROUND UTILITIES. FURTHERMORE, THE CONTRACTOR SHALL CONTACT ALL UTILITY COMPANY REPRESENTATIVES A MINIMUM OF 48 HOURS IN ADVANCE OF ANY WORK.
   a. Contact Dig Tess @ 1-800-344-8377
   b. Contact Luis Cisneros @ ATMOS 229-4627
   c. Contact Dan Augsburger @ Suddenlink 595-2429
   d. Contact Richard Wallace @ Verizon 821-4752
   e. Contact Shawndra Green @ BTU 821-5770
   f. Contact Jayson Barfknecht @ Bryan Utilities 209-5900
   g. Contact Union Pacific Resources @ 778-8525
2. THIS PLAN IS A GENERAL GUIDELINE FOR THE DEMOLITION REQUIRED FOR THIS PROJECT. THE BID ITEM "DEMOLITION" IS A LUMP SUM ITEM INTENDED TO COVER ALL DEMOLITION REQUIRED FOR THIS PROJECT REGARDLESS OF THE SPECIFIC MENTION OF THE ITEM(S) ON THIS SHEET.
3. THE CONTRACTOR IS RESPONSIBLE FOR THE PROPER DISPOSAL OF ALL ITEMS DEMOLISHED WITH THIS WORK.
4. WHERE IMPERVIOUS COVER IS REMOVED, THE AREA SHALL BE GRADED TO DRAIN. NO PONDING OR STANDING WATER WILL BE ACCEPTABLE AT THE COMPLETION OF DEMOLITION.
5. CONTRACTOR SHALL PROTECT ALL ABOVE GROUND AND BELOW GROUND UTILITIES DURING DEMOLITION..
6. SITE SAFETY IS THE CONTRACTORS RESPONSIBILITY. THE CONTRACTOR SHALL ASSURE THAT THE SITE IS IN FULL COMPLIANCE WITH ALL FEDERAL, STATE AND LOCAL REGULATIONS AT ALL TIMES.
7. THE CONTRACTOR SHALL RELOCATE ALL ELECTRICAL SERVICE TO THE NEW SIGN LOCATION. AN ELECTRICAL PERMIT IS REQUIRED BY THE CITY OF BRYAN FOR THIS WORK. IT IS THE CONTRACTORS RESPONSIBILITY TO OBTAIN THIS PERMIT.
8. ALL SOIL EXPOSED BY CONSTRUCTION SHALL BE HYDROMULCHED UNLESS WORK ON SITE IMPROVEMENTS CONTINUE.
9. CONTRACTOR SHALL ENSURE THAT NO DIRT FROM THE PROJECT ACCUMULATES IN THE EXISTING STREETS. IF DIRT OR DEBRIS FROM THE PROJECT SITE ACCUMULATES ON ADJACENT STREETS, THE CONTRACTOR SHALL IMMEDIATELY CLEAN THOSE AREAS.
10. CONTRACTOR SHALL PLACE EROSION CONTROL PROTECTION AT APPROPRIATE DOWNSTREAM LOCATIONS TO MINIMIZE SILT AND DEBRIS FROM LEAVING THE CONSTRUCTION SITE AND ENTERING THE DRAINAGE SYSTEM.
11. ONCE VEGETATION IS WELL ESTABLISHED THE CONTRACTOR IS RESPONSIBLE FOR REMOVING ALL TEMPORARY EROSION CONTROL MEASURES (I.E. SILT FENCE, ROCK CHECK DAMS, ETC.)
12. STORM WATER STRUCTURAL CONTROLS SHALL BE INSTALLED AS SOON AS PRACTICAL AND MAINTAINED IN GOOD WORKING ORDER UNTIL THE SITE IS STABILIZED.
13. THE CONTRACTOR SHALL COMPLY WITH THE TCEQ STORM WATER DISCHARGE PROGRAM AND IS RESPONSIBLE FOR COMPLETING AND FILING THE APPROPRIATE FORMS.
14. THE CONTRACTOR IS RESPONSIBLE FOR ALL TRAFFIC CONTROL. ALL TRAFFIC CONTROL MUST FOLLOW TMUTCD AND BE APPROVED BY THE ENGINEER PRIOR TO IMPLEMENTATION. THIS IS NOT A SEPARATE PAY ITEM.
15. THE CONTRACTOR IS RESPONSIBLE FOR TEMPORARY ELECTRICAL AND WATER AS NEEDED FOR DEMOLITION.

GENERAL CONSTRUCTION NOTES:

1. It shall be the responsibility of the Contractor to verify the exact location of ALL existing underground utilities. Furthermore, the Contractor shall contact all utility company representatives a minimum of 48 hours in advance of any excavation.
   a. Contact Dig Tess @ 1–800–344–8377
   b. Contact Dan Augsburger @ Suddenlink 595–2429
   c. Contact Richard Wallace @ Verizon 821–4752
   d. Contact Shawndra Green @ BTU 821–5770
   e. Contact Jayson Barfknecht @ Bryan Utilities 209–5900
   f. Contact Luis Cisneros @ Atmos Gas (Gas) 229–4627
   g. Contact Union Pacific Resources @ 778–8525
2. All construction shall be in accordance with the current City of Bryan Standard Specifications for Street Construction, B/CS Unified Technical Specifications, Water and Sewer and Generals, 2012, and BCS Unified Design Details. All inspection shall be performed by the staff of the City Engineer of Bryan. All construction shall be coordinated with the City of Bryan City Engineer.
3. In lieu of using the construction materials indicated in these plans, the Contractor shall obtain written approval from the City Engineer for any substitution prior to Construction. Requests for changes should include product information and an engineers seal where applicable. The contractor shall be financially responsible for the engineer's time spent reviewing changes and redesigning based on contractors requests.
4. Trench Safety Requirements shall be in accordance with O.S.H.A. Standard 29 CFR Part 1926 Subpart P and all federal, state and local regulations.
5. TRENCHING AND BACKFILLING: All trenching and backfilling shall conform to the specifications set out herein. Testing shall be provided by a certified laboratory, at the Owner's expense, to verify these standards. Any retesting due to substandard work shall be at the expense of the Contractor. Structural areas shall include all sidewalks and shall extend 5' beyond the curb lines of all streets, alleys and parking areas.
6. It is the responsibility of the contractor to comply with all State and Federal Regulations regarding construction activities near energized overhead power lines. Additionally, the contractor shall coordinate all proposed work and procedures with BTU.
7. All materials & labor not identified as a Separate Bid Item shall be considered subsidiary to the item in which it is used. All materials and equipment shall be both furnished and installed unless otherwise noted.
8. The Contractor must provide construction staking from the information provide on these plans.
9. All soil exposed by construction shall receive cellulose fibermulch seeding.
10. Trenches may be left open overnight if properly barricaded.
11. Adjustment of Water Meters, Valves, Manholes, Irrigation Systems, and any other Public or Private Utility, etc. are not separate pay items. The Price of the adjustment shall be subsidiary to the construction of Sewer Line, Force Main, etc.
12. The contractor shall coordinate with Suddenlink Communications, BTU, and Verizon to adjust the location of existing facilities, if necessary.
13. The contractor is responsible for traffic control in accordance with TMUTCD. This is not a separate pay item.
14. Temporary spoil areas will be identified on site by owner.
15. Contractor shall provide parking lot striping in accordance with the layout shown on this plan.
16. All dimensions are to the back of curb unless otherwise noted.
17. The contractor shall be responsible for the containment and proper disposal of all liquid and solid waste associated with this project. The contractor shall use all means necessary to prevent the occurrence of windblown litter from the project site.
18. NOTE: Demolition/Construction Waste – Site is required to provide containment for waste prior to and during demolition/construction. Solid waste roll off boxes and/or metal dumpsters shall be supplied by City or City permitted contractor(s) only.

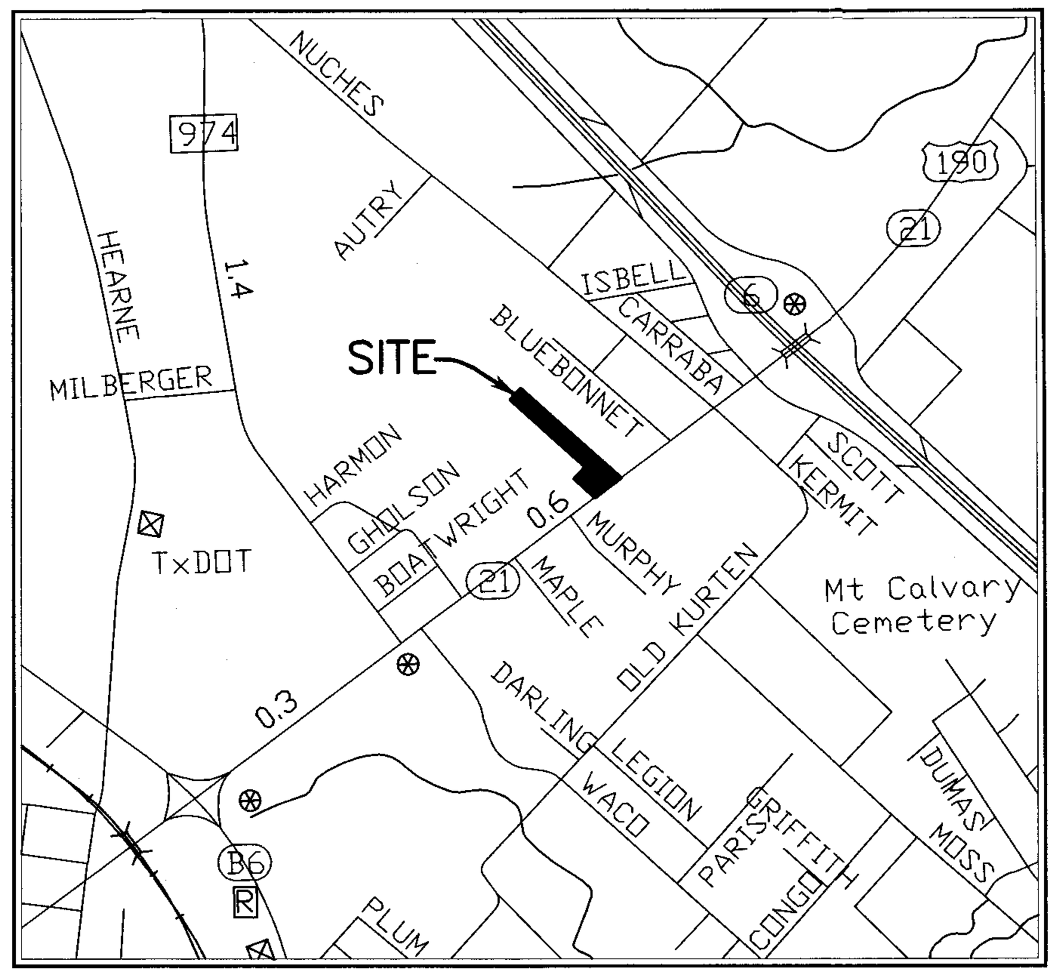

VICINITY MAP
N.T.S.

PARKING ANALYSIS:

Parking Spaces Reqd for Wings–N–More Restaurant	
8sp + (623SF @ 1/50)	= 21 spaces
Total Parking Required	= 21 spaces
Total Parking Provided	= 47 spaces

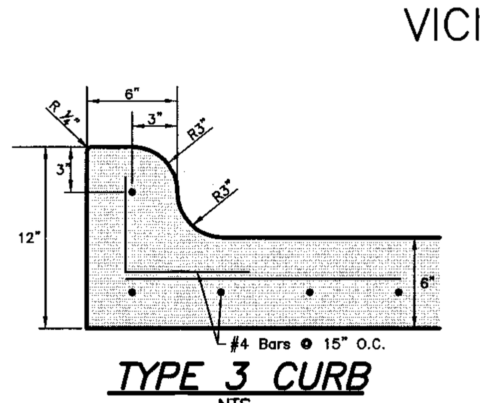

TYPE 3 CURB
NTS

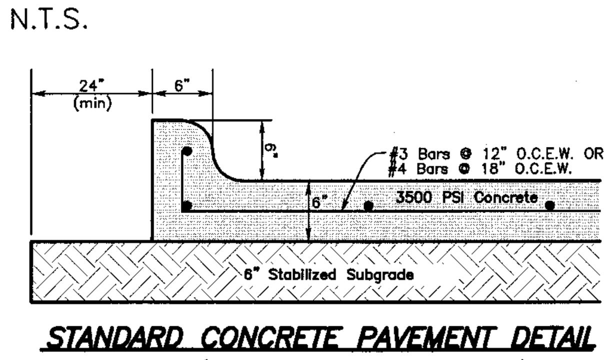

STANDARD CONCRETE PAVEMENT DETAIL
NTS (PER GEOTECH RECOMMENDATIONS)

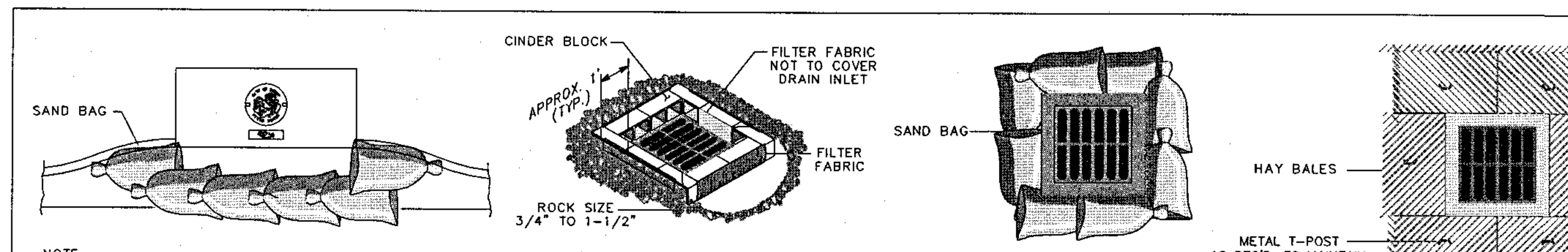

NOTE:
TEMPORARY DEVICES AROUND STORM DRAINS ARE USED TO DETAIN AND/OR FILTER SEDIMENT-LADEN RUNOFF. THE PROTECTION ALLOWS SEDIMENT TO SETTLE PRIOR TO DISCHARGE INTO A STORM DRAIN INLET OR CATCH BASIN.
SAND BAGS SHALL BE UV RESISTANT AND MUST NOT DEGRADE DUE TO ATMOSPHERIC CONDITIONS.
SAND BAGS SHALL BE REPLACED UPON FIRST SIGN OF DETERIORATION.

STORM DRAIN INLET PROTECTION

SWPP1-00

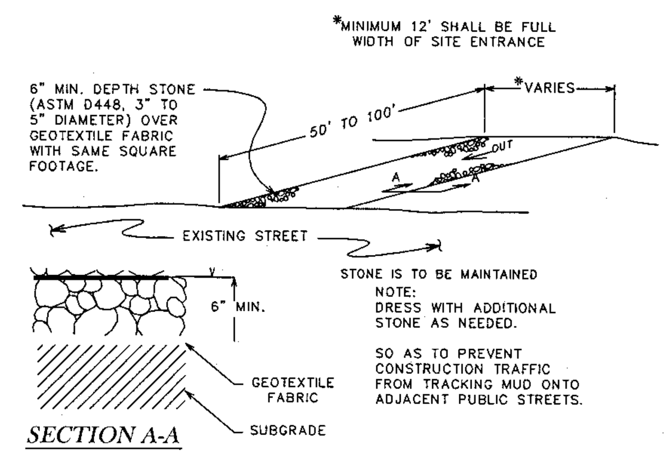

CONSTRUCTION EXIT SILT CONTROL

SWPP1-02

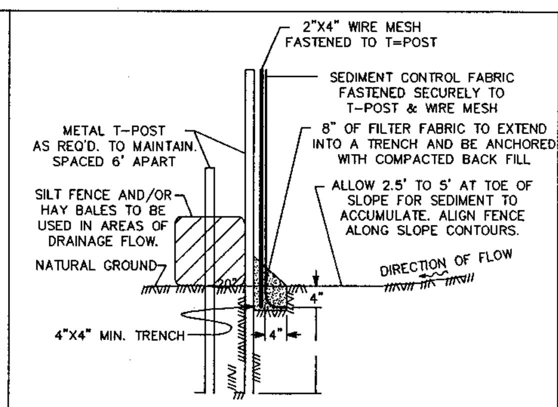

SILT FENCE ASSEMBLY

SWPP1-03

GENERAL NOTES:

ALL AREAS WHERE EXISTING VEGETATION AND GRASS COVER HAVE BEEN BARED BY CONSTRUCTION SHALL BE ADEQUATELY BLOCK SODDED OR HYDROMULCHED AND WATERED UNTIL GROWTH IS ESTABLISHED. IN DEVELOPED AREAS WHERE GRASS IS PRESENT, BLOCK SOD WILL BE REQUIRED. BARED AREAS SHALL BE SEEDED OR SODDED WITHIN 14 CALENDAR DAYS OF LAST DISTURBANCE.

APPROVED EROSION CONTROL MEASURES MUST BE INSTALLED DURING THE ENTIRE TIME THAT EARTH HAS BEEN BARED BY CONSTRUCTION AND SHALL STAY IN PLACE UNTIL ACCEPTABLE VEGETATIVE GROWTH IS ESTABLISHED AFTER CONSTRUCTION IS COMPLETE AND THEN REMOVED BY CONTRACTOR.

ALL EROSION CONTROL MEASURES SHOULD BE CLEANED OF SILT AFTER EVERY RAIN.

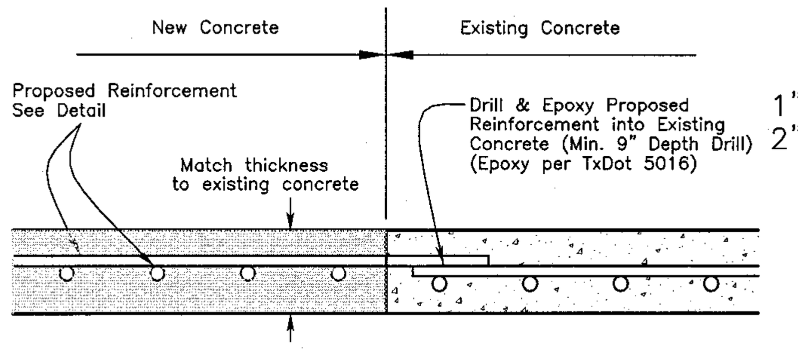

CONNECT TO EXISTING CONCRETE DETAIL
NTS
FILENAME: connect–exist–Concrete.dwg
PLOTTED: 14 Oct 2004 – 2:04 pm

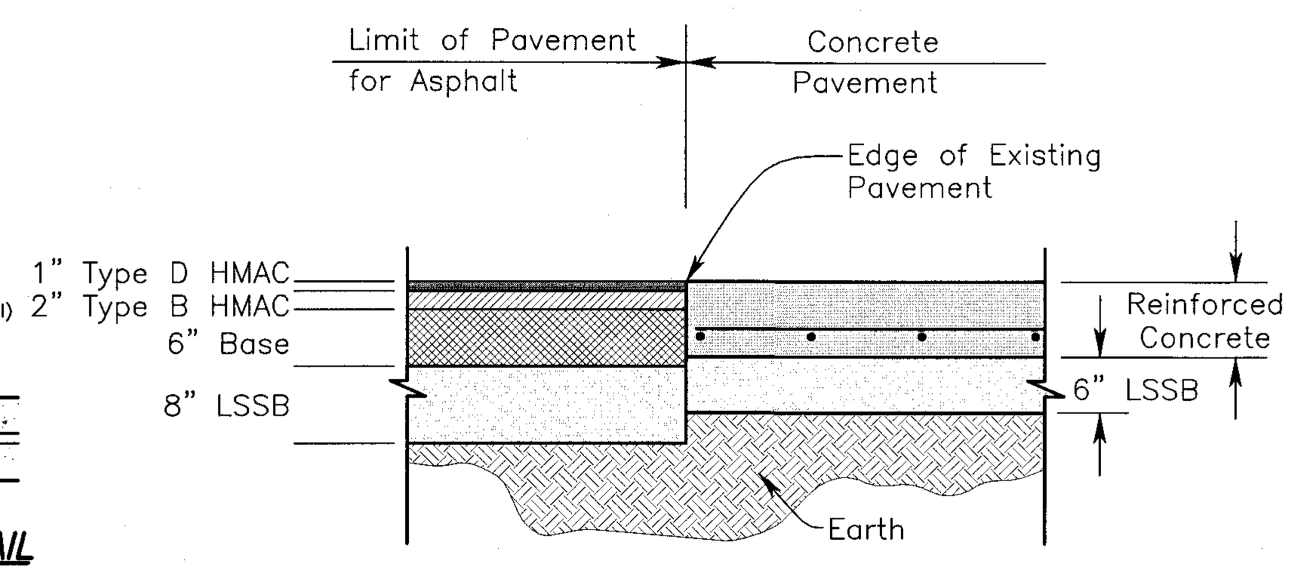

ASPHALT CONNECTION TO CONCRETE PAVEMENT
NTS
FILENAME: connec–asphalt–conc.dwg
PLOTTED: 21 Oct 2002 – 4:02 pm

18" x 12"
See Ordinance for additional Information

All curbs and curb ends designated as firelanes on plans shall be painted red with 4" (four inch) white lettering stating "FIRE LANE–NO PARKING–TOW AWAY ZONE" Wording may not be spaced for than fifteen (15) feet apart. In addition to the curbs being striped, a fire lane sign 12" wide and 18" in height (as seen hereon) shall be mounted at each entrance.*

* 8" (eight inch) high red stripe and 4" (four inch) white lettering may be striped on the surface of the pavement behind parking stalls in lieu of signage.

FIRE LANE NO PARKING TOW AWAY ZONE
FIRE LN STRIPING

FIRE LANE SIGN

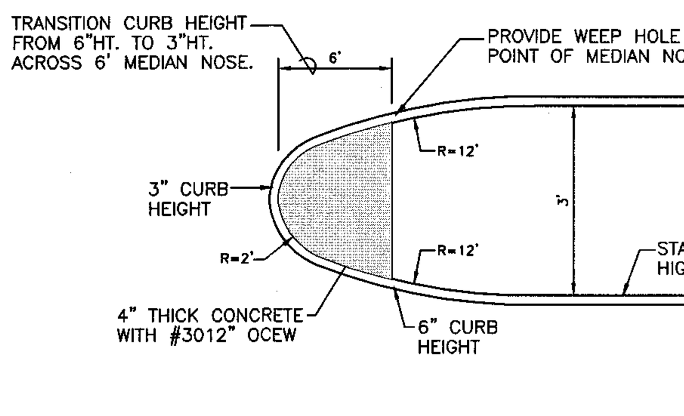

MEDIAN NOSE DETAIL
NTS

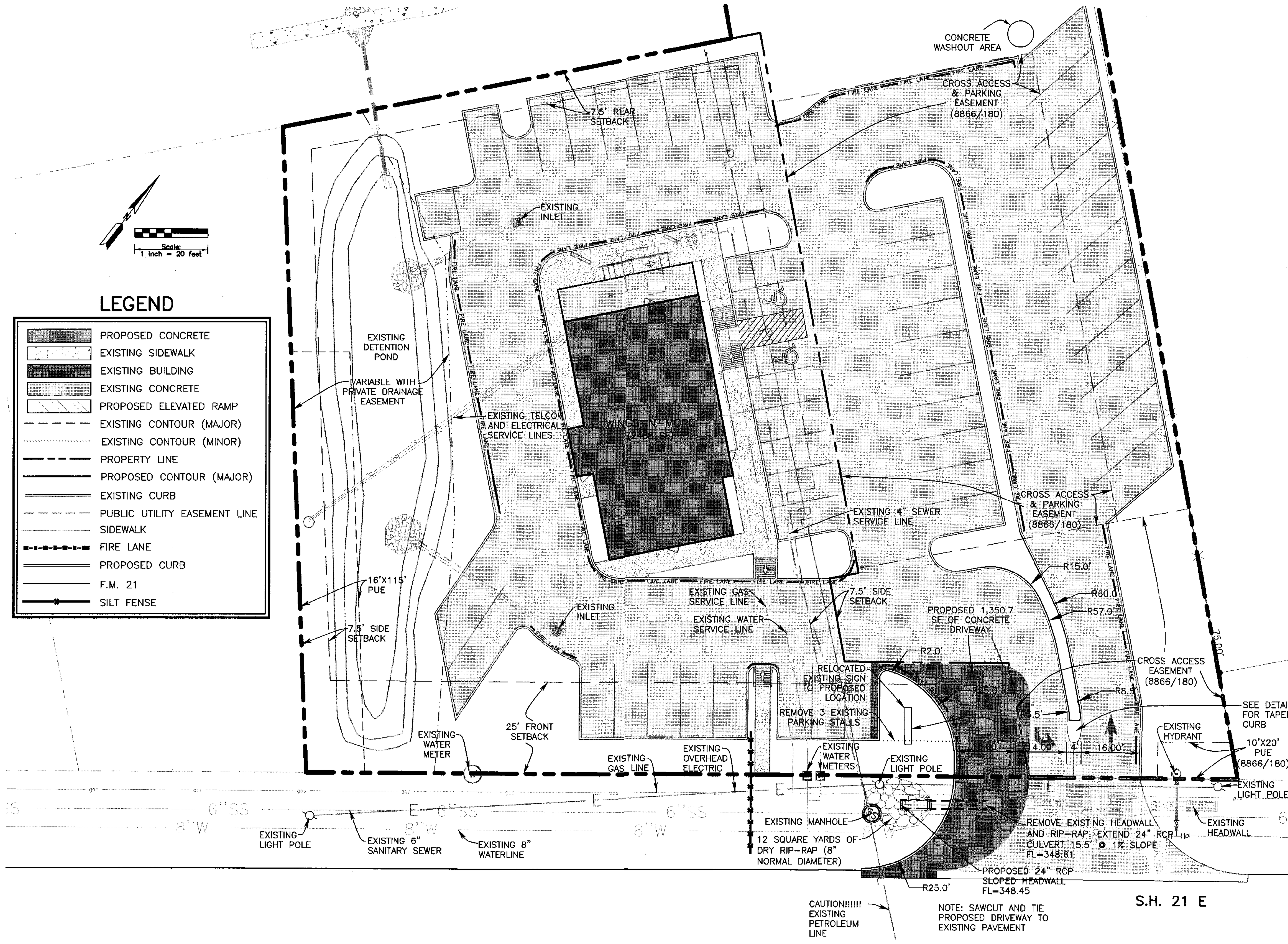

LEGEND

	PROPOSED CONCRETE
	EXISTING SIDEWALK
	EXISTING BUILDING
	EXISTING CONCRETE
	PROPOSED ELEVATED RAMP
	EXISTING CONTOUR (MAJOR)
	EXISTING CONTOUR (MINOR)
	PROPERTY LINE
	PROPOSED CONTOUR (MAJOR)
	EXISTING CURB
	PUBLIC UTILITY EASEMENT LINE
	SIDEWALK
	FIRE LANE
	PROPOSED CURB
	F.M. 21
	SILT FENSE

MITCHELL M&M MORGAN
T.979.260.6963
F.979.260.3564
TX. FIRM # F–1443
3204 EARL RUDDER FWY S.
COLLEGE STATION, TX 77845
PLAN & DESIGN SPECIALISTS IN CIVIL ENGINEERING • HYDRAULICS HYDROLOGY • UTILITIES • STREETS SITE PLANS • SUBDIVISIONS
www.mitchellandmorgan.com

Firm #F–1443
8/5/14
STATE OF TEXAS
VERONICA J.B. MORGAN
77689
REGISTERED PROFESSIONAL ENGINEER

AUGUST 2014
Designed by: VJBM
Drawn By: JUJ,KB
Checked By:VJBM,JM

Prepared For:
Mark Dennard
Wings–N–More
10500 SH 30, Suite 200
College Station, TX 77845

Revisions

DRIVEWAY EXPANSION
WINGS–N–MORE – SH 21
Bryan, Texas

01

Development Services
AUG 19 2014
RECEIVED