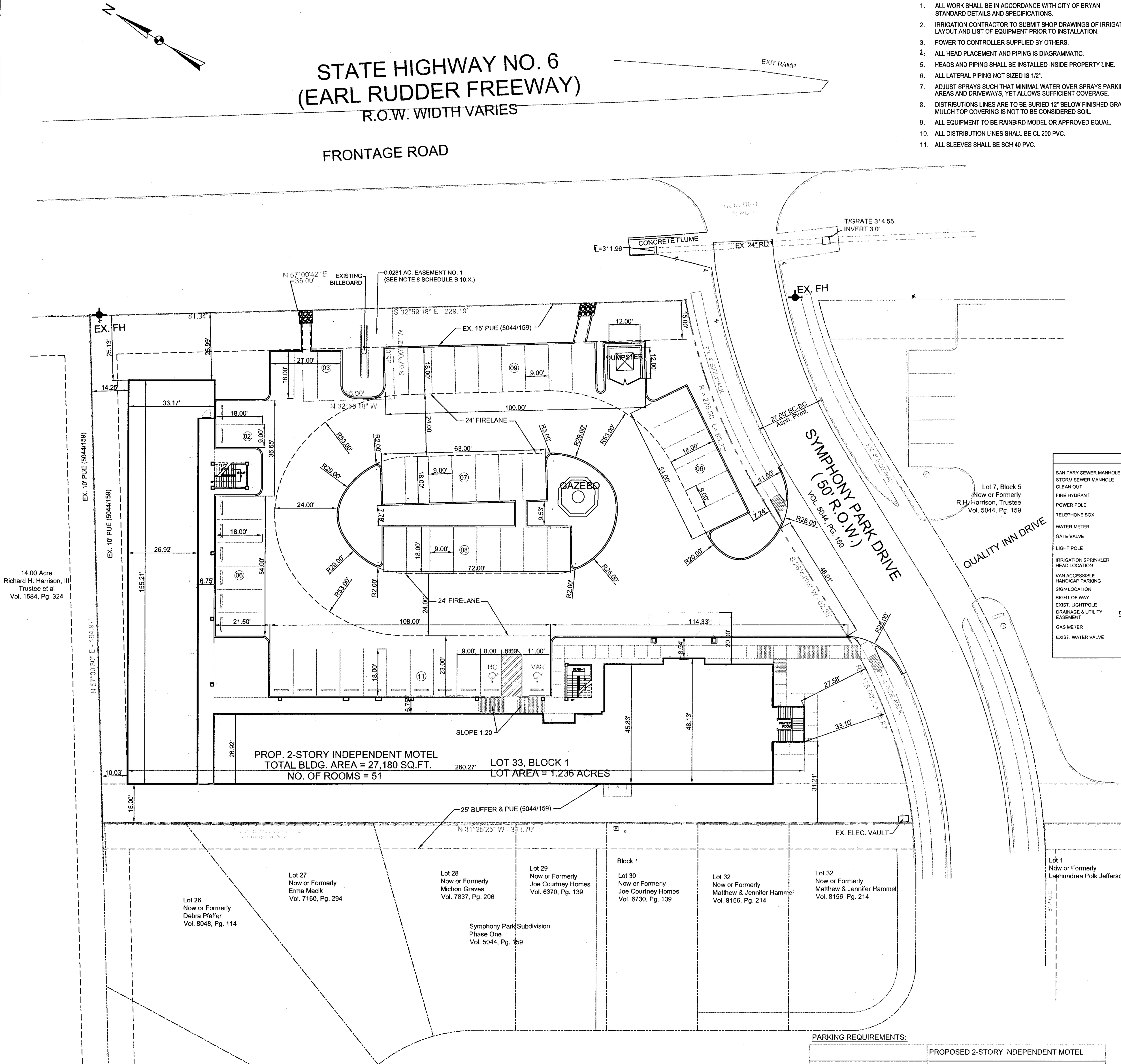

01 ENGINEERING SITE PLAN AND DIMENSION CONTROL

SCALE: 1" = 20'-0"

GRAPHIC SCALE 0 10 20 40

IRRIGATION NOTES:

1. ALL WORK SHALL BE IN ACCORDANCE WITH CITY OF BRYAN STANDARD DETAILS AND SPECIFICATIONS.
2. IRRIGATION CONTRACTOR TO SUBMIT SHOP DRAWINGS OF IRRIGATION LAYOUT AND LIST OF EQUIPMENT PRIOR TO INSTALLATION.
3. POWER TO CONTROLLER SUPPLIED BY OTHERS.
4. ALL HEAD PLACEMENT AND PIPING IS DIAGRAMMATIC.
5. HEADS AND PIPING SHALL BE INSTALLED INSIDE PROPERTY LINE.
6. ALL LATERAL PIPING NOT SIZED IS 1/2".
7. ADJUST SPRAYS SUCH THAT MINIMAL WATER OVER SPRAYS PARKING AREAS AND DRIVEWAYS, YET ALLOWS SUFFICIENT COVERAGE.
8. DISTRIBUTIONS LINES ARE TO BE BURIED 12" BELOW FINISHED GRADE, MULCH TOP COVERING IS NOT TO BE CONSIDERED SOIL.
9. ALL EQUIPMENT TO BE RAINBIRD MODEL OR APPROVED EQUAL.
10. ALL DISTRIBUTION LINES SHALL BE CL 200 PVC.
11. ALL SLEEVES SHALL BE SCH 40 PVC.

11. "THE CONTRACTOR SHALL BE RESPONSIBLE FOR THE CONTAINMENT AND PROPER DISPOSAL OF ALL LIQUID AND SOLID WASTE ASSOCIATED WITH THIS PROJECT. THE CONTRACTOR SHALL USE ALL MEANS NECESSARY TO PREVENT THE OCCURRENCE OF WINDBLOWN LITTER FROM THE PROJECT SITE."
12. "DEMOLITION/CONSTRUCTION WASTE - SITE IS REQUIRED TO PROVIDE CONTAINMENT FOR WASTE PRIOR TO AND DURING DEMOLITION/CONSTRUCTION. SOLID WASTE ROLL OFF BOXES AND/OR METAL DUMPSTERS SHALL BE SUPPLIED BY CITY OR CITY PERMITTED CONTRACTOR(S) ONLY."
13. "FIRE SPRINKLER SYSTEM - POTABLE WATER SUPPLY MUST BE PROTECTED BY TESTABLE DOUBLE CHECK VALVE ASSEMBLY, AND INSTALL AS PER CITY ORDINANCE."
14. A "KNOX BOX" SECURITY KEY SYSTEM IS REQUIRED ON ALL BUILDINGS AND A KNOX SWITCH IS REQUIRED ON ALL GATED ENTRANCES.

FIRE LANE STRIPING SPECIFICATIONS AND REQUIREMENTS

THE ACCESS ROADWAY AND/OR FIRE LANE SHALL BE STRIPED ON A PAVED SURFACE, AND BE CLEARLY MARKED ON THE PAVEMENT WITH A "RED" LINE AT LEAST FOUR (4) INCHES WIDE. "FIRE LANE - NO PARKING - TOW AWAY ZONE " IN NOT LESS THAN FOUR (4) INCH LETTERS IN "WHITE" SHALL BE PLACED EVERY OTHER FIFTEEN (15) FEET ON THE STRIP. WHERE THE FIRE LANE IS ADJACENT TO A CURB, ALL CURBS AND CURB ENDS SHALL BE PAINTED RED WITH FOUR INCH (4") WHITE LETTERING STATING "FIRE LANE - NO PARKING - TOW AWAY ZONE". WORDING MAY NOT BE SPACED MORE THAN FIFTEEN FEET (15') APART. INCHES PAINTED IN "YELLOW" SHALL BE PLACED AT ALL ENTRANCES TO THE FIRE LANE (LETTERING MAY BE LARGER, BUT 18" IS MINIMUM). ALL FIRE LANES SHALL CONNECT AT BOTH ENDS TO A DEDICATED STREET OR BE CONSTRUCTED WITH TURNAROUND AREAS AT THE DEAD-END WITH A MINIMUM RADIUS OF FIFTY (50) FEET. ALL PAINT REFERRED TO SHALL BE A TRAFFIC MARKING PAINT. WHEN REQUIRED DURING CONSTRUCTION OR OTHER TEMPORARY USE, APPROVED SIGNS SHALL BE PROVIDED AND MAINTAINED FOR FIRE APPARATUS ACCESS ROADS TO IDENTIFY SUCH ROADS AND PROHIBIT THE OBSTRUCTION THEREOF OR BOTH. SIGN MUST BE SECURED SO THAT THEY CANNOT BE MOVED UNTIL PERMANENT FIRE LANE IS PAINTED.

1. FIRELANES SHALL REMAIN OPEN/ACCESSIBLE AT ALL TIME DURING CONSTRUCTION.
2. FIRELANE STRIPING & PAVING SPECIFICATIONS SHALL BE PER CITY'S GENERAL DESIGN STANDARDS DETAIL.
3. FIRELANE SHALL BE INSTALLED & ACCEPTED BY THE CITY PRIOR TO ANY CONSTRUCTION ABOVE THE FOUNDATION.

GENERAL NOTES:

1. ALL CONSTRUCTION SHALL CONFORM TO THE REQUIREMENTS OF THE STANDARD SPECIFICATIONS OF CITY OF BRYAN, TEXAS.
2. CONTRACTOR SHALL PROVIDE "AS BUILT" PLANS TO THE ENGINEER SO THAT THE REPRODUCIBLES OF THE ENGINEERING PLANS MAY BE CORRECTED TO REFLECT "AS BUILT" CONDITIONS.
3. THE CONTRACTOR SHALL BE REQUIRED TO PROVIDE AND MAINTAIN ALL NECESSARY WARNING AND SAFETY DEVICES (FLASHING LIGHTS, BARRICADES, SIGNS, ETC.) TO PROTECT THE PUBLIC SAFETY AND HEALTH UNTIL THE WORK HAS BEEN COMPLETED AND ACCEPTED BY THE CITY.
4. "ALL ROOF AND GROUND-MOUNTED MECHANICAL EQUIPMENT SHALL BE SCREENED FROM VIEW OR ISOLATED SO AS NOT TO BE VISIBLE FROM ANY PUBLIC RIGHT-OF-WAY OR RESIDENTIAL DISTRICT WITHIN 150' OF THE SUBJECT LOT, MEASURED FROM A POINT FIVE FEET ABOVE GRADE. SUCH SCREENING SHALL BE COORDINATED WITH THE BUILDING ARCHITECTURE AND SCALE TO MAINTAIN A UNIFIED APPEARANCE."
5. EXTERIOR BUILDING AND SITE LIGHTING WILL MEET THE STANDARDS OF SECTION 7.10 OF THE UNIFIED DEVELOPMENT ORDINANCE. THE LIGHT SOURCE SHALL NOT PROJECT BELOW AN OPAQUE HOUSING AND NO FIXTURE SHALL DIRECTLY PROJECT LIGHT HORIZONTALLY. FIXTURES WILL BE MOUNTED IN SUCH A MANNER THAT THE PROJECTED CONE OF LIGHT DOES NOT CROSS ANY PROPERTY LINE.
6. THE LOCATIONS OF EXISTING UTILITIES SHOWN ON THESE PLANS ARE APPROXIMATE. IT IS THE RESPONSIBILITY OF THE CONTRACTOR TO LOCATE AND VERIFY IN THE FIELD ANY UTILITIES THAT MAY CONFLICT WITH THIS CONSTRUCTION. AT LEAST 24 HOURS PRIOR TO BEGINNING CONSTRUCTION IN THE VICINITY OF UNDERGROUND UTILITIES, NOTIFY THE FOLLOWING APPLICABLE:

ATMOS ENERGY	- (888) 286-6700
VERIZON WIRELESS	- (979) 774-9908
SUDDENLINK COMMUNICATION	- (877) 612-5036
BRYAN TEXAS UTILITIES	- (979) 821-5700

7. 100% COVERAGE OF GROUNDCOVER, DECORATIVE PAVING, DECORATIVE ROCK, OR A PERENNIAL GRASS IS REQUIRED IN PARKING LOT ISLANDS, SWALES AND DRAINAGE AREAS, THE PARKING LOT SETBACK, RIGHTS-OF-WAY, AND ADJACENT PROPERTY DISTURBED DURING CONSTRUCTION.
8. "IRRIGATION SYSTEM - POTABLE WATER SUPPLY MUST BE PROTECTED BY EITHER AN ATMOSPHERIC OR PRESSURE VACUUM BREAKER, OR TESTABLE DOUBLE CHECK VALVE ASSEMBLY, AND INSTALLED AS PER CITY ORDINANCE."
9. ALL BACK FLOW DEVICES WILL BE INSTALLED AND TESTED UPON INSTALLATION AS PER CITY ORDINANCE 2394.
10. SIGNAGE WILL BE PERMITTED SEPARATELY.

LEGEND

SANITARY SEWER MANHOLE	SS	EXISTING CONTOURS
STORM SEWER MANHOLE	MH	PROPOSED CONTOURS
CLEAN OUT	CO	PROPOSED SANITARY SEWER PIPE
FIRE HYDRANT	FH	EXISTING SANITARY SEWER PIPE
POWER POLE	PP	PROPOSED WATER LINE
TELEPHONE BOX	TB	EXISTING WATER LINE
WATER METER	WM	PROPOSED POWER LINE
GATE VALVE	GV	EXISTING POWER LINE
LIGHT POLE		PROPOSED TELEPHONE LINE
IRRIGATION SPRINKLER HEAD LOCATION		EXISTING TELEPHONE LINE
VAN ACCESSIBLE HANDICAP PARKING		PROPOSED GAS LINE
SIGN LOCATION		EXISTING GAS LINE
RIGHT OF WAY	R.O.W.	PROPOSED GUY WIRE
EXIST. LIGHTPOLE		EXISTING GUY WIRE
DRAINAGE & UTILITY EASEMENT	DE/UE	OVERHEAD ELECTRICAL LINE
GAS METER		
EXIST. WATER VALVE		

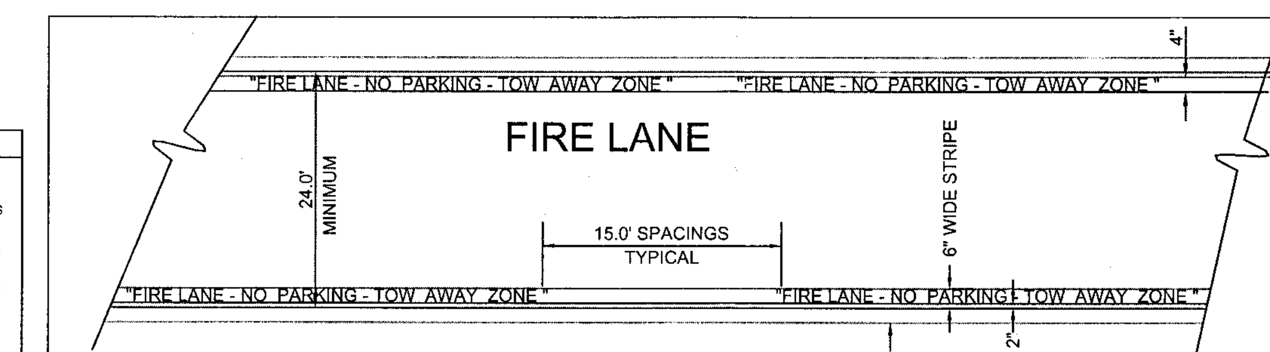

02 FIRE LANE STRIPING DETAILS

SCALE: NTS

STRIPING DETAILS AND SPECIFICATIONS

A. PAINT:

1. STRIPE SHALL BE SIX(6) INCHES WIDE PAINTED WITH AN EXTERIOR ACRYLIC LATEX PAINT. COLOR SHALL BE "TRAFFIC RED" GLIDDEN NO. 63251 OR EQUAL.
2. LETTERS SHALL BE FOUR(4) INCHES HIGH PAINTED WITH AN EXTERIOR ACRYLIC PAINT. COLOR SHALL BE "TRAFFIC WHITE" GLIDDEN NO. 563245 OR EQUAL.

B. APPLICATION:

1. STRIPE MAY BE BRUSHED OR SPRAYED, ONE COAT TO FINISH.
2. LETTERS SHALL BE STENCIL FORMED, BRUSH APPLIED AND SPACED AS DETAILED ON THIS SHEET.

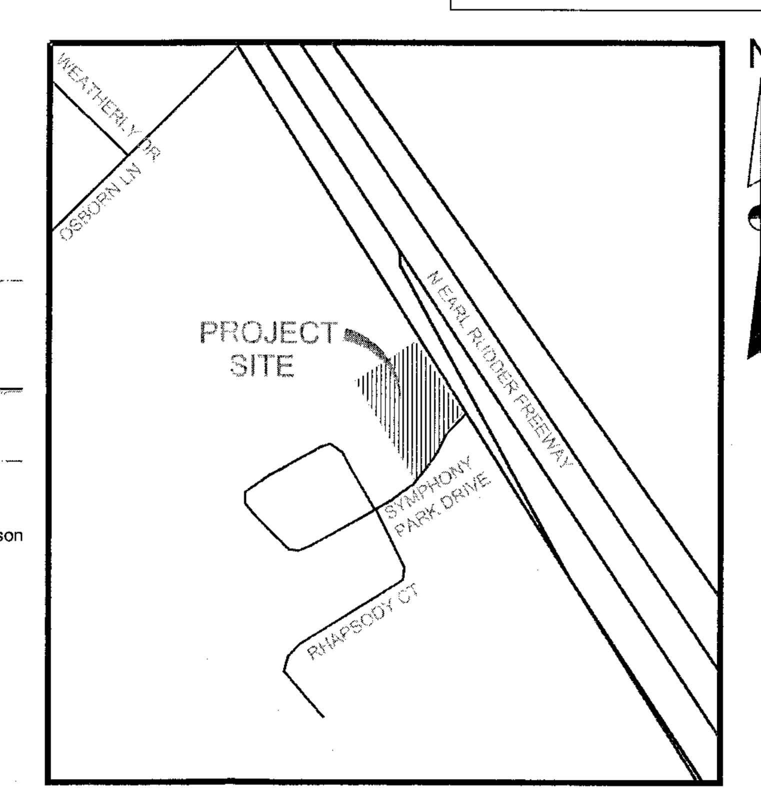

VICINITY MAP SCALE : NONE

NOTES:

1. THIS PROPERTY IS NOT IN A 100-YEAR FLOOD HAZARD AREA ACCORDING TO THE FLOOD INSURANCE RATE MAPS (FIRM) PREPARED BY THE FEDERAL EMERGENCY MANAGEMENT AGENCY FOR THE CITY OF BRYAN (48041C0215F, EFFECTIVE DATE OF APRIL 2, 2014.)

PARKING REQUIREMENTS:

	PROPOSED 2-STORY INDEPENDENT MOTEL
LOT AREA	1.236 ACRE
TOTAL BLDG. AREA	27,180 SQ.FT.
PARKING REQUIRED	1.00 SPACE/ROOM = 51 SPACES
PARKING FURNISHED	52 SPACES
HC PARKING REQUIRED	2 SPACES (1 VAN)
HC PARKING PROVIDED	2 SPACES (1 VAN)

GENERAL CONSTRUCTION NOTES

IT SHALL BE THE GENERAL CONTRACTOR'S RESPONSIBILITY TO NOTIFY, PROVIDE INFORMATION, AND COORDINATE WITH THE CITY/COUNTY UTILITY DEPARTMENTS AND OTHER UTILITY COMPANIES REGARDING THE LOCATION, DEPTHS, SIZES AND ANY RELEVANT INFORMATION OF ALL PROPOSED ABOVE AND UNDERGROUND UTILITIES INCLUDING GAS, FIBER OPTIC COMMUNICATION CABLES, AND THE LIKE, PRIOR TO PERFORMING ANY DIRT WORK, EXCAVATION, EMBANKMENT FILL OR HOLE DRILLING RELATED TO ONSITE OR OFF SITE WORK FOR THIS PROJECT.

OWNERSHIP AND USE OF DRAWINGS

THESE DRAWINGS WHETHER PRINTED OR ELECTRONIC IN FORM, PREPARED BY THE ENGINEER / JR EISENHOUR CONSULTING LLC, ARE INSTRUMENTS OF SERVICE THROUGH WHICH THE CONTRACTOR SHALL EXECUTE THE WORK DESCRIBED HEREIN. ONLY THE ENGINEER SHALL OWN, CLAIM AUTHORSHIP, CLAIM COPYRIGHT OR RETAIN ANY OTHER RESERVED RIGHTS ON THESE DRAWINGS. UNLESS OTHERWISE AGREED TO OR PERMITTED IN WRITING BY THE ENGINEER, THESE DRAWINGS SHALL NOT BE COPIED,

THESE DRAWINGS SHALL BE USED SOLELY FOR THIS PROJECT. THE CONTRACTOR, SUBCONTRACTOR, MATERIAL OR EQUIPMENT SUPPLIER ARE PERMITTED TO USE OR REPRODUCE PORTION(S) OF THE DRAWINGS RELATIVE TO THIER PERFORMANCE CONTRACT AS SPECIFIED IN THE CONTRACT DOCUMENTS.

THESE DRAWINGS SHALL NOT BE USED BY THE CONTRACTOR, SUBCONTRACTOR, MATERIAL OR EQUIPMENT SUPPLIER ON OTHER PROJECTS OR ON ADDITIONS TO THIS PROJECT OUTSIDE THE ORIGINAL SCOPE OF WORKS WITHOUT THE SPECIFIC WRITTEN CONSENT

OFFICIAL SUBMISSION OF THESE PLANS TO REGULATORY AGENCIES SHALL ONLY MEAN COMPLIANCE TO REGULATORY REQUIREMENTS AND SHALL NOT BE CONSTRUED AS PUBLICATION OR LOSS OF ENGINEER'S COPYRIGHT'S OR OTHER RESERVED RIGHTS.

EISENHOUR Consulting, LLC
1044-Morningside Court
Mesquite, TX. 75150
Cell No: 972.415.1730
TeleFax: 214.501.2697

PROJECT NAME:
ENGINEERING SITE PLAN AND DIMENSION CONTROL
PROP. 2 - STORY INDEPENDENT MOTEL
SYMPHONY PARK DRIVE,
CITY OF BRYAN
1.236 ACRES

OWNER/DEVELOPER :
A & M DEVELOPERS
7701 LAS COLINAS RIDGE, SUITE 250
IRVING, TEXAS 75063

ENGINEER COMPANY:
E.M. FAGGET ENGINEERING
P.O. BOX 17605
FORT WORTH, TEXAS 76102

PROJECT STATUS: FOR PERMITTING
PROJECT MANAGER: FREDERICK L. GATELA
DESIGN COORDINATOR: -
REVISION DATE: 11/01/14
PLOT DATE: 11/01/14
DRAWING BY: -

ENGINEER'S SIGNED/SEALED:

DATE

ON THE DATE INDICATED HEREIN. ALTERATION OF A SEALED DOCUMENT WITHOUT PROPER NOTIFICATION TO THE RESPONSIBLE ENGINEER IS AN OFFENSE UNDER THE TEXAS ENGINEERING ACT.

SHEET: C1
OF: 12

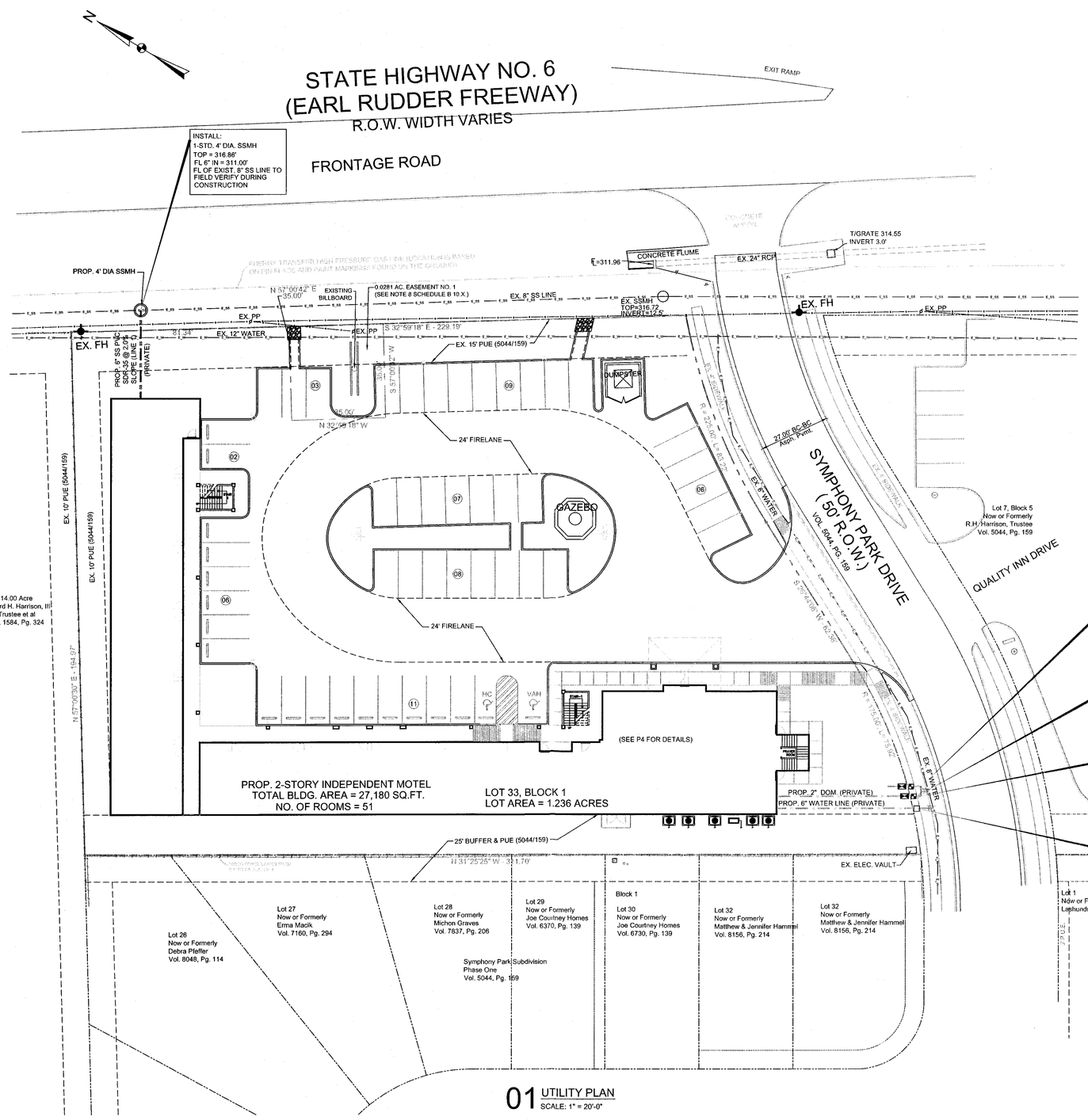

01 UTILITY PLAN
SCALE: 1" = 20'-0"

GRAPHIC SCALE
0 20
10 40

GENERAL NOTES:

1. ALL CONSTRUCTION SHALL CONFORM TO THE REQUIREMENTS OF THE STANDARD SPECIFICATIONS OF THE CITY OF BRYAN, TEXAS.
2. CONTRACTOR SHALL PROVIDE "AS BUILT" PLANS TO THE ENGINEER SO THAT THE REPRODUCIBLES OF THE ENGINEERING PLANS MAY BE CORRECTED TO REFLECT "AS BUILT" CONDITIONS.
3. THE CONTRACTOR SHALL BE REQUIRED TO PROVIDE AND MAINTAIN ALL NECESSARY WARNING AND SAFETY DEVICES (FLASHING LIGHTS, BARRICADES, SIGNS, ETC.) TO PROTECT THE PUBLIC SAFETY AND HEALTH UNTIL THE WORK HAS BEEN COMPLETED AND ACCEPTED BY THE CITY.
4. THE LOCATIONS OF EXISTING UTILITIES SHOWN ON THESE PLANS ARE APPROXIMATE. IT IS THE RESPONSIBILITY OF THE CONTRACTOR TO LOCATE AND VERIFY IN THE FIELD ANY UTILITIES THAT MAY CONFLICT WITH HIS CONSTRUCTION. AT LEAST 48 HOURS PRIOR TO BEGINNING CONSTRUCTION IN THE VICINITY OF UNDERGROUND UTILITIES, NOTIFY THE FOLLOWING AND ANY OTHER THAT MAY BE APPLICABLE.

   CITY OF BRYAN SEWER/WATER/TRAFFIC
5. THE CONTRACTOR SHALL BE RESPONSIBLE FOR THE PROTECTION OF ALL EXISTING UTILITIES OR SERVICE LINES CROSSED OR EXPOSED BY HIS WORK. WHERE EXISTING UTILITIES OR SERVICE LINES ARE CUT, BROKEN, OR DAMAGED, THE CONTRACTOR SHALL REPLACE OR REPAIR THE SAME WITH THE SAME TYPE OF ORIGINAL MATERIAL, OR BETTER AT HIS OWN EXPENSE. FAILURE TO SHOW UTILITY OR SERVICE LINES ON THE PLANS DOES NOT RELIEVE THE CONTRACTOR OF THE RESPONSIBILITY TO PREVENT DAMAGE TO SAID LINES.
6. STABILIZED CONSTRUCTION ENTRANCE SHALL BE MAINTAINED. SEDIMENT TRACKED ONTO EXISTING STREETS SHALL BE REMOVED IMMEDIATELY.
7. ALL UTILITY WORK IN CITY R.O.W. TO BE IN ACCORDANCE WITH CITY OF BRYAN SPECIFICATIONS .
8. CONTRACTOR IS RESPONSIBLE FOR OBTAINING ANY PERMITS, PAYMENT OF ANY FEES AND PROVIDING BONDS NECESSARY FOR WORK IN ANY PUBLIC R.O.W.'S AS REQUIRED BY ANY GOVERNMENTAL AUTHORITY.
9. ALL PLUMBING LINES, ELECTRICAL CONDUITS AND PVC SLEEVES TO BE IMBEDED IN 12" OF SAND, BACKFILLED & COMPACTED WITH SELECT FILL. ALL EMPTY CONDUITS TO HAVE END CAPS. CONDUIT FOR ELECTRICAL TO HAVE PULL STRINGS.
10. WATER LINE PIPING SHALL BE PVC C900 CLASS 200 DR 14.
11. SANITARY SEWER LINE IS TO BE SDR 35 PVC GREEN IN COLOR.
12. CONTACT THE CITY ENGINEER FOR SCHEDULING OF PRECONSTRUCTION MEETING PRIOR TO STARTING CONSTRUCTION ON THE PUBLIC WORKS PORTION OF THE PROJECT.
13. IN STREET CONSTRUCTION BARRICADE LAYOUT MUST MEET TMUTCD WORK ZONE REQUIREMENTS.
14. THE MINIMUM BURY DEPTH SHALL BE AT LEAST 48" FROM FINISHED GRADE TO THE TOP OF THE PIPE.

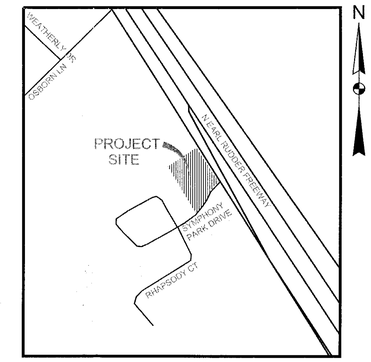

VICINITY MAP SCALE : NONE

LEGEND			
SANITARY SEWER MANHOLE	SS	500	EXISTING CONTOURS
STORM SEWER MANHOLE	MH	500	PROPOSED CONTOURS
CLEAN OUT	CO	SS	PROPOSED SANITARY SEWER PIPE
FIRE HYDRANT	FH	E_SS	EXISTING SANITARY SEWER PIPE
POWER POLE	PP	P	PROPOSED WATER LINE
TELEPHONE BOX	TB	E_W	EXISTING WATER LINE
WATER METER	WM	E	PROPOSED POWER LINE
GATE VALVE	GV	E_T	EXISTING POWER LINE
LIGHT POLE		T	PROPOSED TELEPHONE LINE
IRRIGATION SPRINKLER HEAD LOCATION		E_T	EXISTING TELEPHONE LINE
VAN ACCESSIBLE HANDICAP PARKING		GAS	PROPOSED GAS LINE
SIGN LOCATION		E_GAS	EXISTING GAS LINE
RIGHT OF WAY	R.O.W.	GW	PROPOSED GUY WIRE
EXIST. LIGHTPOLE		E_GW	EXISTING GUY WIRE
DRAINAGE & UTILITY EASEMENT	DE&UE	OHEL	OVERHEAD ELECTRICAL LINE
GAS METER			
EXIST. WATER VALVE			

EISENHOUR Consulting, LLC
1044 Morningside Court
Mesquite, TX. 75150
Cell No: 972.415.1730
Tel&Fax: 214.501.2697

PROJECT NAME:

UTILITY PLAN
PROP. 2 - STORY INDEPENDENT MOTEL
SYMPHONY PARK DRIVE,
CITY OF BRYAN
1.236 ACRES

OWNER/DEVELOPER :

A & M DEVELOPERS
7701 LAS COLINAS RIDGE, SUITE 250
IRVING, TEXAS 75063

ENGINEER COMPANY:

E.M. FAGGET ENGINEERING
P.O. BOX 17605
FORT WORTH, TEXAS 76102

PROJECT STATUS:
FOR PERMITTING

PROJECT MANAGER:
FREDERICK L. GATELA

DESIGN COORDINATOR:
-

REVISION DATE: 11/01/14
PLOT DATE: 11/01/14
DRAWING BY:
-

ENGINEER'S SIGNED/SEALED:

DATE:

ON THE DATE INDICATED HEREIN. ALTERATION OF A SEALED DOCUMENT WITHOUT PROPER NOTIFICATION TO THE RESPONSIBLE ENGINEER IS AN OFFENSE UNDER THE TEXAS ENGINEERING ACT.

SHEET:
C2
OF: 12

GENERAL CONSTRUCTION NOTES

IT SHALL BE THE GENERAL CONTRACTORS RESPONSIBILITY TO NOTIFY, PROVIDE INFORMATION, AND COORDINATE WITH THE CITY/COUNTY UTILITY DEPARTMENTS AND OTHER UTILITY COMPANIES REGARDING THE LOCATION, DEPTHS, SIZES AND ANY RELEVANT INFORMATION OF EXISTING UTILITIES, INCLUDING BUT NOT LIMITED TO WATER, SANITARY SEWER, GAS, COMMUNICATION CABLES, AND THE LIKE, PRIOR TO PERFORMING ANY DIRT WORK, EXCAVATION, EMBANKMENT FILL OR HOLE DRILLING RELATED TO ONSITE OR OFF SITE WORK FOR THIS PROJECT.

OWNERSHIP AND USE OF DRAWINGS

THESE DRAWINGS WHETHER PRINTED OR ELECTRONIC IN FORM, PREPARED BY THE ENGINEER / PRESENHOUR CONSULTING LLC, ARE INSTRUMENTS OF SERVICE THROUGH WHICH THE CONTRACTOR SHALL EXECUTE THE WORK DESCRIBED HEREIN. ONLY THE ENGINEER SHALL OWN CLAIM AUTHORSHIP, CLAIM COPYRIGHT OR RETAIN ANY OTHER RESERVED RIGHTS ON THESE DRAWINGS. UNLESS OTHERWISE AGREED TO OR PERMITTED IN WRITING BY THE ENGINEER, THESE DRAWINGS SHALL NOT BE COPIED.

THESE DRAWINGS SHALL BE USED SOLELY FOR THIS PROJECT. THE CONTRACTOR, SUBCONTRACTOR, MATERIAL OR EQUIPMENT SUPPLIER ARE PERMITTED TO USE OR REPRODUCE PORTION(S) OF THE DRAWINGS RELATIVE TO THEIR PERFORMANCE CONTRACT AS SPECIFIED IN THE CONTRACT DOCUMENTS.

THESE DRAWINGS SHALL NOT BE USED BY THE CONTRACTOR, SUBCONTRACTOR, MATERIAL OR EQUIPMENT SUPPLIER ON OTHER PROJECTS OR ON EXTENSIONS TO THIS PROJECT OUTSIDE THE ORIGINAL SCOPE OF WORKS WITHOUT THE SPECIFIC WRITTEN CONSENT

OFFICIAL SUBMISSION OF THESE PLANS TO REGULATORY AGENCIES SHALL ONLY MEAN COMPLIANCE TO REGULATORY REQUIREMENTS AND SHALL NOT BE CONSTRUED AS PUBLICATION OR LOSS OF ENGINEER'S COPYRIGHTS OR OTHER RESERVED RIGHTS.

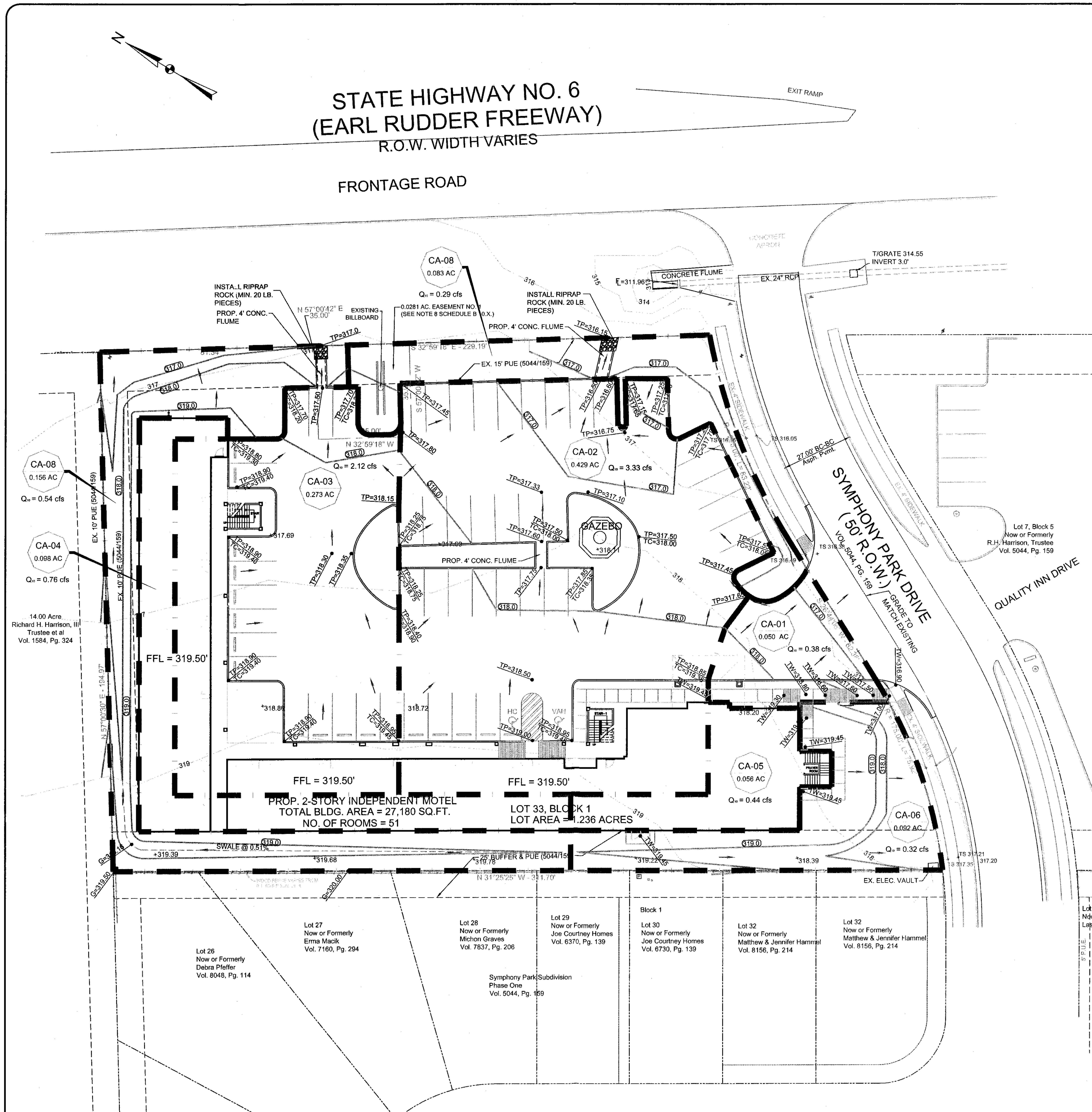

01 GRADING AND DRAINAGE PLAN

SCALE: 1" = 20'-0"

GRAPHIC SCALE

0 10 20 40

NOTES:

1. THIS PROPERTY IS NOT IN A 100-YEAR FLOOD HAZARD AREA ACCORDING TO THE FLOOD INSURANCE RATE MAPS (FIRM) PREPARED BY THE FEDERAL EMERGENCY MANAGEMENT AGENCY FOR THE CITY OF BRYAN (48041C0215F, EFFECTIVE DATE OF APRIL 2, 2014.)

GENERAL NOTES:

1. A GRADING PERMIT MUST BE OBTAINED FROM CITY OF BRYAN PRIOR TO COMMENCEMENT OF ANY CONSTRUCTION ACTIVITIES.
2. EROSION CONTROL WILL BE REQUIRED DURING ALL PHASES OF CONSTRUCTION. EROSION CONTROL MEASURES PER CITY OF BRYAN STANDARD REQUIREMENTS.

SITE WORK GRADING PREPARATION

1. SITE OF THE PROPOSED BUILDING AND PAVING AREAS CONSISTS OF AN UNDEVELOPED PLOT OF LAND THAT WAS COVERED WITH VEGETATION CONSISTING OF MEDIUM TO TALL GRASSES AND SCATTERED CLUSTERS OF TREES. WE STRONGLY RECOMMEND THAT THE VEGETATION, WHICH INCLUDES ORGANIC MATTER AND TOPSOILS AND ANY WEAK OR SILTY SOILS, BE STRIPPED AND REMOVED FROM THE AREA OF THE PLANNED BUILDING AND ALL PLANNED PAVED AREAS. THE REMOVAL OF THE VEGETATION SHOULD INCLUDE ALL ROOTS, INCLUDING THE MAJOR ROOT SYSTEMS ASSOCIATED WITH LARGE TREES, BOTH CURRENTLY EXISTING AS WELL AS PREVIOUSLY EXISTING ON THE SITE. THE REMOVAL OF THE MAJOR ROOT SYSTEMS SHOULD INCLUDE ANY DESICCATED SOILS PRESENT WITHIN THE ROOT "BULBS" OF THE TREES. IF THE EXISTING VEGETATION AND ORGANIC MATERIALS ARE NOT REMOVED FROM THE AREAS OF THE PROPOSED BUILDING AND PAVING, IT IS POSSIBLE THAT THE EXISTING VEGETATION WILL INTERFERE WITH THE PROPOSED CONSTRUCTION AND COULD POTENTIALLY ADVERSELY IMPACT THE FUTURE PERFORMANCE OF THE PROPOSED STRUCTURE AND PAVED SURFACES.
3. GOOD DRAINAGE SHOULD BE ESTABLISHED AT THE OUTSET OF CONSTRUCTION AND MAINTAINED TO PREVENT WATER FROM PONDING IN THE BUILDING AND PAVING AREAS.
4. WASTE CUT ON UNUSED PORTION OF LOT. LEAVE SMOOTH IN MOWABLE CONDITION.
5. THE EXPOSED SUBGRADE SHOULD BE SCARIFIED TO A MINIMUM DEPTH OF SIX INCHES, THE MOISTURE ADJUSTED, AND RECOMPACTED TO NOT LESS THAN 95 PERCENT OF THE MAXIMUM DRY DENSITY AS OBTAINABLE IN THE STANDARD COMPACTION PROCEDURE (ASTM D-698-07e1). IN A MOISTURE RANGE OF OPTIMUM TO 4% ABOVE THE SOIL'S OPTIMUM MOISTURE CONTENT.
6. GENERAL SITE FILL MAY CONSIST OF LOW TO MODERATE PLASTICITY SOILS. THE GENERAL SITE FILL SOILS SHOULD HAVE A MAXIMUM LL VALUE OF 49 AND CORRESPONDING PI VALUES OF BETWEEN 19 AND 32, INCLUSIVE. THE FILL MATERIALS SHOULD GENERALLY CLASSIFY AS SC OR CL TYPE SOILS UNDER THE CURRENT USCS.
7. SELECT OR STRUCTURAL FILL MATERIAL SHOULD CONSIST OF A LOW-PLASTICITY SOILS THAT CLASSIFY AS EITHER A CLAYEY SAND (SC TYPE SOIL UNDER THE USCS) OR A VERY SANDY CLAY (CL TYPE SOIL UNDER THE CURRENT USCS) WITH A PI BETWEEN 10 AND 18, INCLUSIVE. THE MINIMUM PLASTICITY IS ESTABLISHED SO THAT PURELY GRANULAR SOILS ARE NOT USED AS SELECT FILL. THE SMALL PERCENTAGE OF CLAYS IN THE SELECT FILL REQUIRED TO ACHIEVE THE MINIMUM PI OF 10 SHOULD HELP TO DISCOURAGE MOISTURE FROM STORM WATER INFILTRATING INTO THE SOILS OF THE BUILDING PAD. THE SELECT FILL SHOULD NOT EXTEND BEYOND THE FACE OF THE BUILDING FOUNDATION.
8. POSITIVE DRAINAGE MUST BE PROVIDED AWAY FROM THE STRUCTURE TO PREVENT THE PONDING OF WATER IN THE SELECT FILL.
9. CARE MUST BE TAKEN THAT BACKFILL AGAINST THE EXTERIOR FACE OF GRADE BEAMS IS PROPERLY COMPACTED ON-SITE CLAY. THE SELECT FILL SHOULD NOT EXTEND OUTSIDE THE LIMITS OF THE STRUCTURE.
10. ANY NEED TO LIME STABILIZE SUBGRADE UNDER PAVING OR WATER INJECT SUBGRADE BENEATH SELECT FILL WILL BE DETERMINED BY TESTING FOLLOWING SUBGRADE EXCAVATION.
11. ALL LABORATORY TESTING TO BE AT OWNER'S EXPENSE. SEQUENCE TO BE DETERMINED BY G.C., OWNER AND OWNER'S ENGINEER.

RUNOFF COMPUTATION (POST-DEVELOPMENT)

AREA NO.	AREA total (ac.)	C	tc (min)	I_2 (in/hr)	Q_2 (cfs)	I_{10} (in/hr)	Q_{10} (cfs)	I_{25} (in/hr)	Q_{25} (cfs)	I_{100} (in/hr)	Q_{100} (cfs)	REMARKS
CA-01	0.050	0.90	10	6.30	0.31	8.635	0.38	9.861	0.44	11.639	0.52	SHEET FLOW ACROSS PAVING TO SYMPHONY PARK DRIVE
CA-02	0.141	0.90	10	6.30	2.43	8.635	3.33	9.861	3.80	11.639	4.49	SHEET FLOW ACROSS ROOFING & PAVING TO PROP. 4' CONC. FLUME
CA-03	0.273	0.90	10	6.30	1.55	8.635	2.12	9.861	2.42	11.639	2.86	SHEET FLOW ACROSS ROOFING & PAVING TO PROP. 3' CONC. FLUME
CA-04	0.098	0.90	10	6.30	0.55	8.635	0.76	9.861	0.87	11.639	1.02	SHEET FLOW ACROSS ROOFING TO LANDSCAPE TO EXISTING FLUME
CA-05	0.056	0.90	10	6.30	0.32	8.635	0.44	9.861	0.50	11.639	0.59	SHEET FLOW ACROSS ROOFING TO LANDSCAPE TO SYMPHONY PARK DRIVE
CA-06	0.092	0.40	10	6.30	0.23	8.635	0.32	9.861	0.36	11.639	0.43	SHEET FLOW ACROSS LANDSCAPE TO SYMPHONY PARK DRIVE
CA-07	0.156	0.40	10	6.30	0.39	8.635	0.54	9.861	0.61	11.639	0.72	SHEET FLOW ACROSS TO LANDSCAPE TO EXISTING FLUME
CA-08	0.083	0.40	10	6.30	0.21	8.635	0.29	9.861	0.33	11.639	0.38	SHEET FLOW ACROSS TO LANDSCAPE TO EXISTING FLUME
TOTAL	1.236				6.00		8.18		9.34		11.02	

THEREFORE Q10 TOTAL =8.17 CFS < Q10 ALLOWABLE = 14.2 CFS
(AS PER SYMPHONY PARK DRAINAGE REPORT EXHIBIT B & C-1)

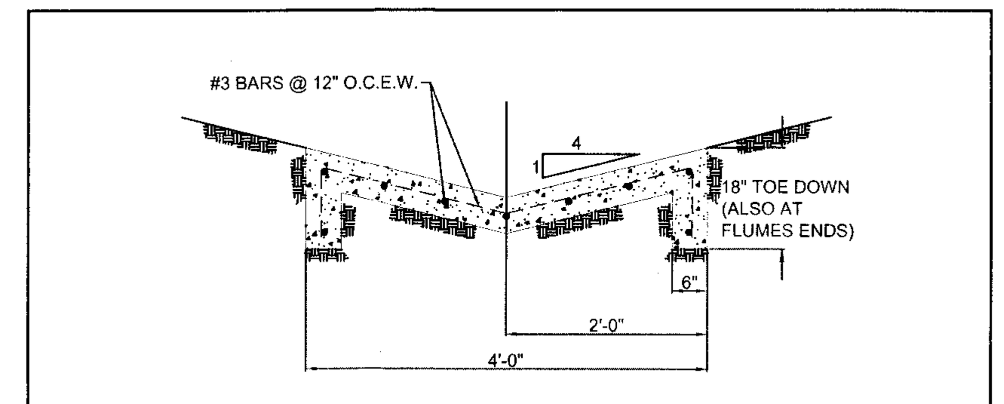

EXPANSION JOINTS AT 60' O.C.

28-DAY CONCRETE STRENGTH=3000 PSI

CITY OF BRYAN	STANDARD FLUME SECTION		CITY OF COLLEGE STATION
DATE: AUG. 2012	B/CS UNIFIED STANDARD DETAIL	DETAIL NO: D2-04	

NOTE:

THE PROPOSED SITE HAS INCLUDED IN THE DESIGN OF DETENTION POND OF SYMPHONY PARK DRAINAGE REPORT.

LEGEND

SANITARY SEWER MANHOLE	SS		EXISTING CONTOURS
STORM SEWER MANHOLE	MH		PROPOSED CONTOURS
CLEAN OUT	CO		PROPOSED SANITARY SEWER PIPE
FIRE HYDRANT	FH		EXISTING SANITARY SEWER PIPE
POWER POLE	PP		PROPOSED WATER LINE
TELEPHONE BOX	TB		EXISTING WATER LINE
WATER METER	WM		PROPOSED POWER LINE
GATE VALVE	GV		EXISTING POWER LINE
LIGHT POLE			PROPOSED TELEPHONE LINE
IRRIGATION SPRINKLER HEAD LOCATION			EXISTING TELEPHONE LINE
VAN ACCESSIBLE HANDICAP PARKING			PROPOSED GAS LINE
SIGN LOCATION			EXISTING GAS LINE
RIGHT OF WAY	R.O.W.		PROPOSED GUY WIRE
EXIST. LIGHTPOLE			EXISTING GUY WIRE
DRAINAGE & UTILITY EASEMENT	DE/UE		OVERHEAD ELECTRICAL LINE
TOP OF SIDEWALK	TW		PROPOSED DRAINAGE DIVIDE
TOP OF CURB	TC		
TOP OF PAVEMENT	TP		
PROPOSED DRAINAGE AREA	CA - 01		
AREA (ACRE)	1.07 AC		
10 YR STORM RUNOFF (CFS)	Q_{10} = 10.59 cfs		

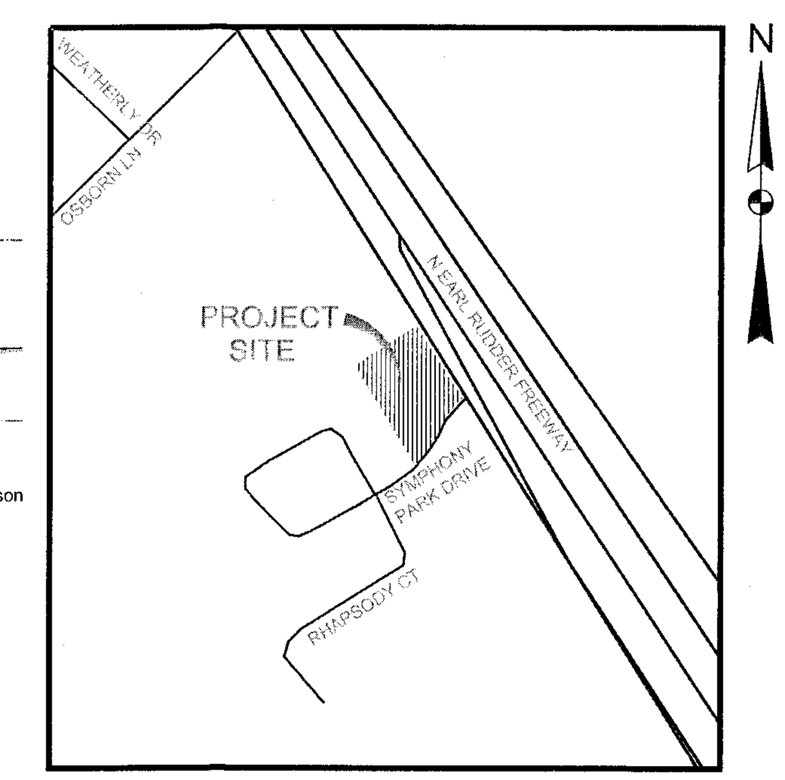

VICINITY MAP SCALE : NONE

GENERAL CONSTRUCTION NOTES

IT SHALL BE THE GENERAL CONTRACTOR'S RESPONSIBILITY TO NOTIFY, PROVIDE INFORMATION, AND COORDINATE WITH THE CITY/COUNTY UTILITY DEPARTMENTS AND OTHER UTILITY COMPANIES REGARDING THE LOCATION, DEPTHS, SIZES AND ANY RELEVANT INFORMATION OF ALL PROPOSED ABOVE AND UNDERGROUND UTILITIES INCLUDING GAS, FIBER OPTIC, COMMUNICATION CABLES, AND THE LIKE, PRIOR TO PERFORMING ANY DIRT WORK, EXCAVATION, EMBANKMENT FILL OR HOLE DRILLING RELATED TO ONSITE OR OFF SITE WORK FOR THIS PROJECT.

OWNERSHIP AND USE OF DRAWINGS

THESE DRAWINGS WHETHER PRINTED OR ELECTRONIC IN FORM, PREPARED BY THE ENGINEER / JR EISENHOUR CONSULTING LLC, ARE INSTRUMENTS OF SERVICE THROUGH WHICH THE CONTRACTOR SHALL EXECUTE THE WORK DESCRIBED HEREIN. ONLY THE ENGINEER SHALL OWN, CLAIM AUTHORSHIP, CLAIM COPYRIGHT OR RETAIN ANY OTHER RESERVED RIGHTS ON THESE DRAWINGS, UNLESS OTHERWISE AGREED TO OR PERMITTED IN WRITING BY THE ENGINEER. THESE DRAWINGS SHALL NOT BE COPIED,

THESE DRAWINGS SHALL BE USED SOLELY FOR THIS PROJECT. THE CONTRACTOR, SUBCONTRACTOR, MATERIAL OR EQUIPMENT SUPPLIER ARE PERMITTED TO USE OR REPRODUCE PORTION(S) OF THE DRAWINGS RELATIVE TO THIER PERFORMANCE CONTRACT AS SPECIFIED IN THE CONTRACT DOCUMENTS.

THESE DRAWINGS SHALL NOT BE USED BY THE CONTRACTOR, SUBCONTRACTOR, MATERIAL OR EQUIPMENT SUPPLIER ON OTHER PROJECTS OR ON ADDITIONS TO THIS PROJECT OUTSIDE THE ORIGINAL SCOPE OF WORKS WITHOUT THE SPECIFIC WRITTEN CONSENT

OFFICIAL SUBMISSION OF THESE PLANS TO REGULATORY AGENCIES SHALL ONLY MEAN COMPLIANCE TO REGULATORY REQUIREMENTS AND SHALL NOT BE CONSTRUED AS PUBLICATION OR LOSS OF ENGINEER'S COPYRIGHT'S OR OTHER RESERVED RIGHTS.

EISENHOUR Consulting, LLC
1044-Morningside Court
Mesquite, TX. 75150
Cell No: 972.415.1730
TeleFax: 214.501.2697

PROJECT NAME:

GRADING AND DRAINAGE PLAN
PROP. 2 - STORY INDEPENDENT MOTEL
SYMPHONY PARK DRIVE,
CITY OF BRYAN
1.236 ACRES

OWNER/DEVELOPER :

A & M DEVELOPERS
7701 LAS COLINAS RIDGE, SUITE 250
IRVING, TEXAS 75063

ENGINEER COMPANY:

E.M. FAGGET ENGINEERING
P.O. BOX 17605
FORT WORTH, TEXAS 76102

PROJECT STATUS: FOR PERMITTING	ENGINEER'S SIGNED/SEALED:	SHEET:
PROJECT MANAGER: FREDERICK L. GATELA		C3
DESIGN COORDINATOR: -	DATE	
REVISION DATE: 11/01/14	ON THE DATE INDICATED HEREIN. ALTERATION OF A SEALED DOCUMENT WITHOUT PROPER NOTIFICATION TO THE RESPONSIBLE ENGINEER IS AN OFFENSE UNDER THE TEXAS ENGINEERING ACT.	OF: 12
PLOT DATE: 11/01/14		
DRAWING BY: -		

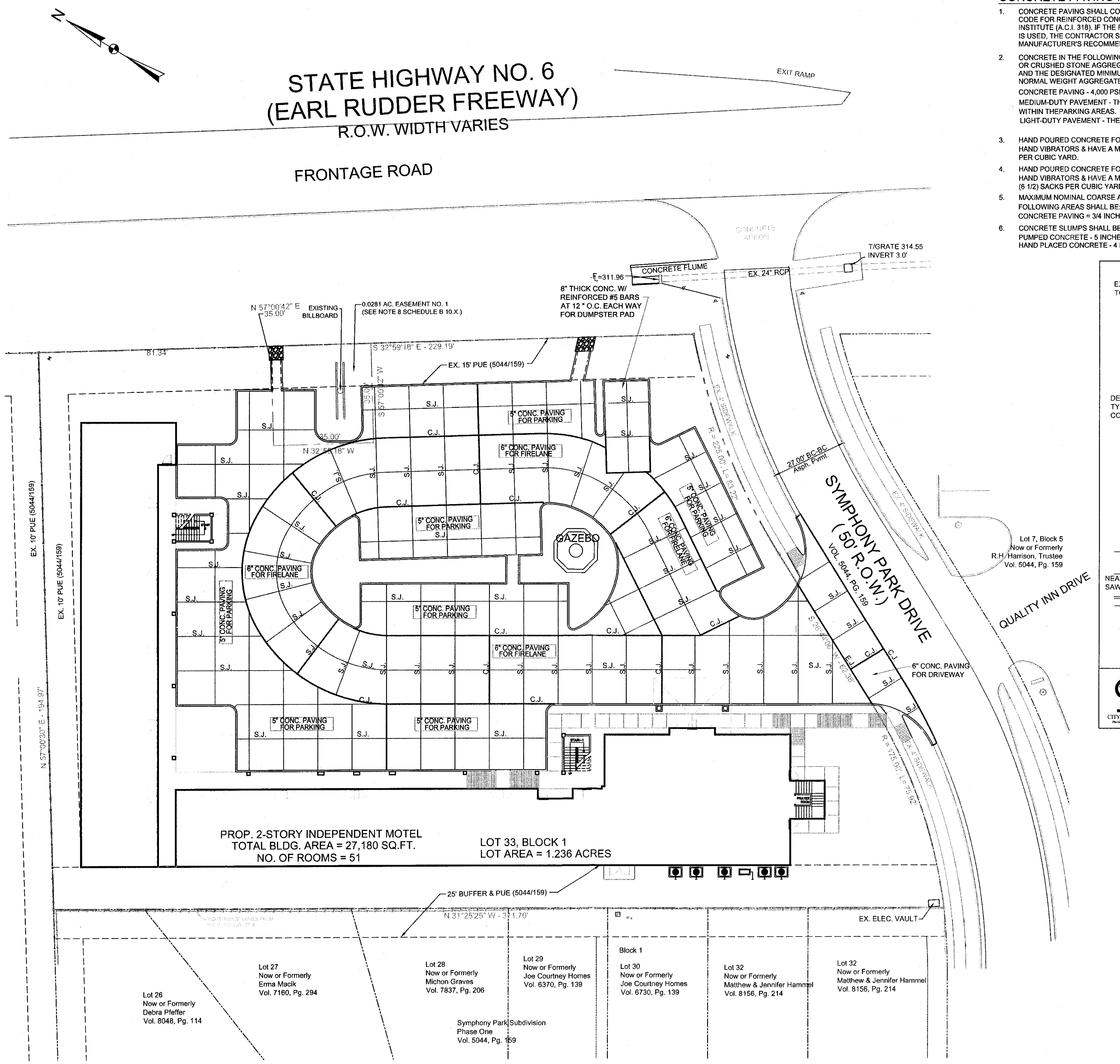

01 PAVING AND JOINTING PLAN

SCALE: 1" = 20'-0"

GRAPHIC SCALE 0 10 20 40

CONCRETE PAVING NOTES

1. CONCRETE PAVING SHALL CONFORM TO THE LATEST BUILDING CODE FOR REINFORCED CONCRETE OF THE AMERICAN CONCRETE INSTITUTE (A.C.I. 318). IF THE FIBERMESH CONCRETE ALTERNATE IS USED, THE CONTRACTOR SHALL ADHERE STRICTLY TO THE MANUFACTURER'S RECOMMENDATIONS AS TO TYPE AND AMOUNT.
2. CONCRETE IN THE FOLLOWING AREAS SHALL HAVE SAND AND GRAVEL OR CRUSHED STONE AGGREGATES, TYPE I OR III PORTLAND CEMENT, AND THE DESIGNATED MINIMUM COMPRESSIVE STRENGTH IN 28 DAYS. NORMAL WEIGHT AGGREGATES SHALL CONFORM TO ASTM C33:
   CONCRETE PAVING - 4,000 PSI CONC. AT 28 DAYS
   MEDIUM-DUTY PAVEMENT - THE ACCESS DRIVE& THE CIRCULATION LANES WITHIN THEPARKING AREAS.
   LIGHT-DUTY PAVEMENT - THE PARKING AREAS
3. HAND POURED CONCRETE FOR SIDEWALKS SHALL BE VIBRATED BY HAND VIBRATORS & HAVE A MIN. CEMENT CONTENT OF FIVE (5) SACKS PER CUBIC YARD.
4. HAND POURED CONCRETE FOR ANY DRIVE APPROACH SHALL BE VIBRATED BY HAND VIBRATORS & HAVE A MIN. CEMENT CONTENT OF SIX & ONE HALF (6 1/2) SACKS PER CUBIC YARD
5. MAXIMUM NOMINAL COARSE AGGREGATE SIZES FOR CONCRETE IN THE FOLLOWING AREAS SHALL BE:
   CONCRETE PAVING = 3/4 INCHES
6. CONCRETE SLUMPS SHALL BE AS FOLLOWS:
   PUMPED CONCRETE - 5 INCHES
   HAND PLACED CONCRETE - 4 INCHES
7. CONCRETE EXPOSED TO WEATHER SHALL BE AIR-ENTRAINED AS FOLLOWS:
   3/4 INCH NOMINAL AGGREGATE SIZE ____ 4% TO 8%
   1 INCH NOMINAL AGGREGATE SIZE ____ 3.5% TO 6.5%
   1 1/2 INCH NOMINAL AGGREGATE SIZE ____ 3% TO 6%
   USE OF AIR-ENTRAINMENT, AND CORRESPONDING REDUCTION OF THE WATER/CEMENT RATIO, MUST BE NOTED ON THE MIX DESIGN. CONTRACTOR SHALL SUBMIT MIX DESIGNS TO ENGINEER FOR REVIEW.
   NO FLY ASH IS PERMITTED IN CONCRETE.
8. DRIVE APPROACH WITHIN THE CITY R.O.W. SHALL MATCH THE STREET THICKNESS.
9. SLOPE OF H.C. RAMP DOWN AT OFFICE SHALL NOT EXCEED A SLOPE OF 1"/12" (.083")
10. ALL CONCRETE PAVING SHALL HAVE A SUBGRADE COMPACTED TO 95% OF ASTM D698.
11. FIRE LANES SHALL REMAIN OPEN/ACCESSIBLE AT ALL TIMES DURING CONSTRUCTION.
12. FIRE LANES SHALL BE INSTALLED AND ACCEPTED BY THE CITY PRIOR TO ANY CONSTRUCTION ABOVE THE FOUNDATION.

REINFORCING STEEL & FIBERMESH NOTES

1. ALL STEEL REINFORCING BARS SHALL BE NEW DOMESTIC DEFORMED BILLET STEEL CONFORMING TO ASTM A615, (#3 AND #4 = GRADE 40) (#5 AND LARGER-GRADE 60) ALL REINFORCEMENT SPECIFICALLY NOTED ON THE DRAWING AS BEING WELDED SHALL BE DOMESTIC STEEL CONFORMING TO ASTM A615, GRADE 40 OR DOMESTIC STEEL CONFORMING TO ASTM A706.
2. DETAILING OF CONCRETE REINFORCEMENT AND ACCESSORIES SHALL BE IN ACCORDANCE WITH ACI 315.
3. ALL REINFORCING BARS LAPS SHALL BE SPLICED A MINIMUM OF OF 36 BAR DIAMETERS.
4. ALL REINFORCING BARS SHALL BE #4 @ 18" O.C.E.W. UNLESS OTHERWISE NOTED.
5. PROTECTION COVER OF REINFORCEMENT SHALL BE AS NOTED BELOW. SEE ACI 318 FOR CONDITIONS NOT NOTED. CONCRETE PLACED AGAINST SOIL = 2 1/2 INCHES

JOINT NOTES

1. EXPANSION JOINTS AT APPROACHES SHALL BE CONSTRUCTED PER DETAIL OF CITY GENERAL DESIGN STANDARDS.
2. THE CONSTRUCTION JOINT SHALL COMPLY WITH STANDARD OF CITY DETAIL.
3. SAWED JOINTS AND CONSTRUCTION JOINTS SHALL BE AS INDICATED ON PLAN AND PER DETAIL.
4. SAW CUT CONCRETE AS SOON AS CONCRETE HAS HARDENED SUFFICIENTLY TO PREVENT SPALLING, AND STRESS CRACKING, BUT WITHIN 12 HOURS OF CONCRETE PLACEMENT.

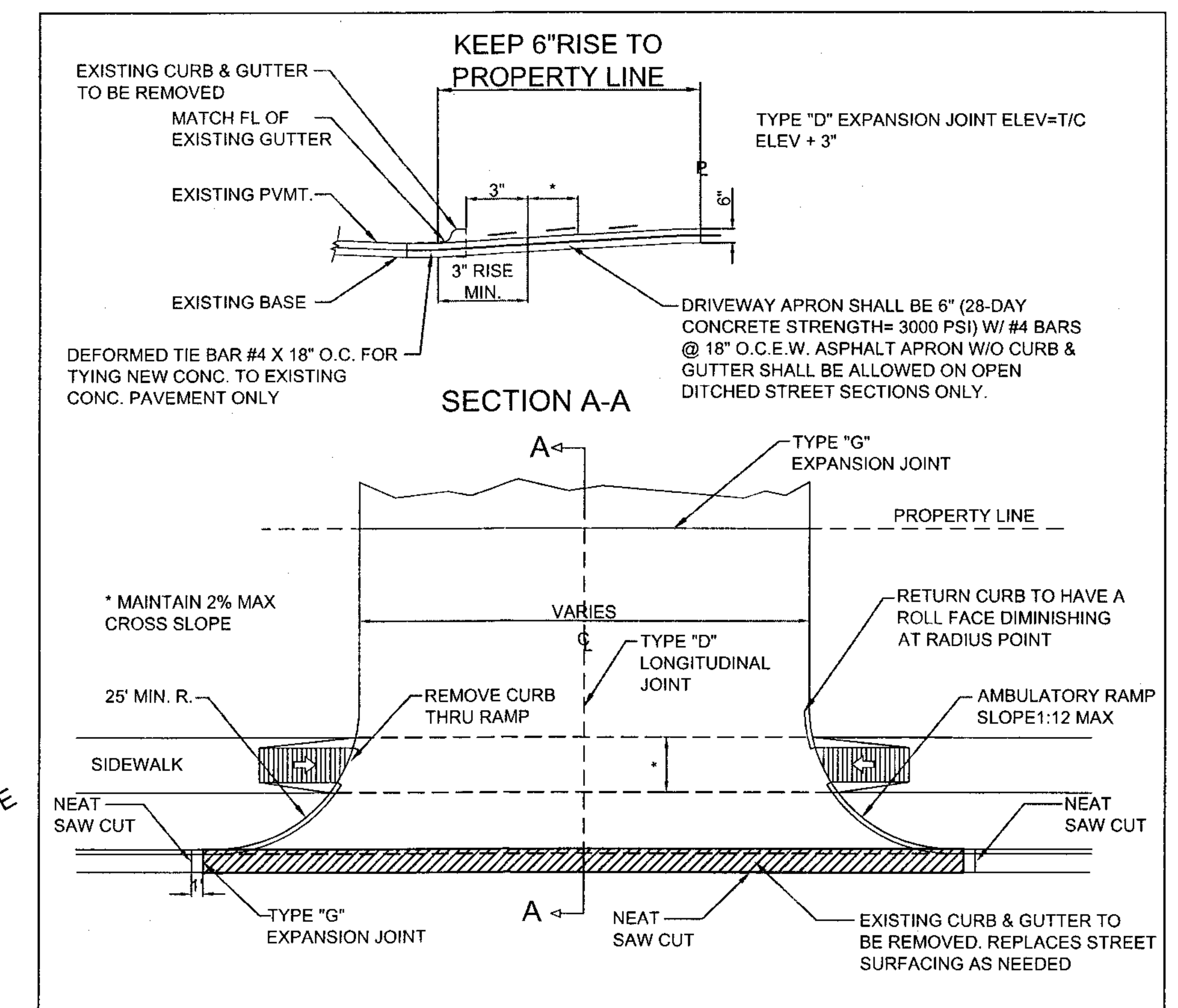

COMMERCIAL DRIVEWAY

CITY OF BRYAN | DATE: AUG. 2012 | B/CS UNIFIED STANDARD DETAIL | DETAIL NO: ST2-03 | CITY OF COLLEGE STATION

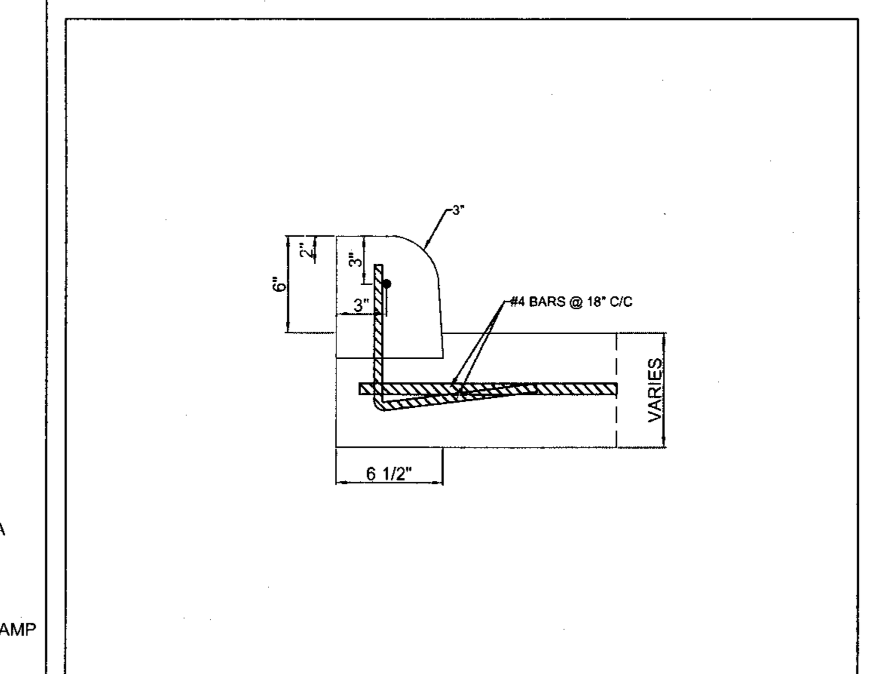

DOWELLED IN CURBS DETAIL

CITY OF BRYAN | DATE: AUG. 2012 | B/CS UNIFIED STANDARD DETAIL | DETAIL NO: ST1-02 | CITY OF COLLEGE STATION

LEGEND

SANITARY SEWER MANHOLE	SS	500	EXISTING CONTOURS
STORM SEWER MANHOLE	MH	500	PROPOSED CONTOURS
CLEAN OUT	CO	SS	PROPOSED SANITARY SEWER PIPE
FIRE HYDRANT	FH	E_SS	EXISTING SANITARY SEWER PIPE
POWER POLE	PP	W	PROPOSED WATER LINE
TELEPHONE BOX	TB	E_W	EXISTING WATER LINE
WATER METER	WM	E	PROPOSED POWER LINE
GATE VALVE	GV	E_E	EXISTING POWER LINE
LIGHT POLE		T	PROPOSED TELEPHONE LINE
IRRIGATION SPRINKLER HEAD LOCATION		E_T	EXISTING TELEPHONE LINE
VAN ACCESSIBLE HANDICAP PARKING		GAS	PROPOSED GAS LINE
SIGN LOCATION		E_GAS	EXISTING GAS LINE
RIGHT OF WAY	R.O.W.	GW	PROPOSED GUY WIRE
EXIST. LIGHTPOLE		E_GW	EXISTING GUY WIRE
DRAINAGE & UTILITY EASEMENT	DE/UE	OHEL	OVERHEAD ELECTRICAL LINE
GAS METER			
EXIST. WATER VALVE			
CONSTRUCTION JOINT	C.J.		
EXPANSION JOINT	E.J.		
SAW JOINT	S.J.		

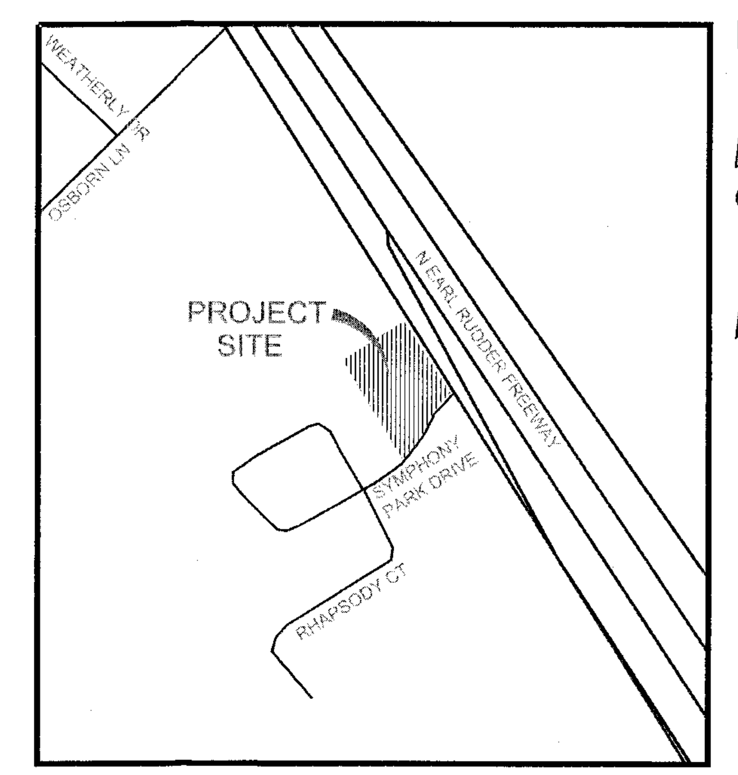

VICINITY MAP SCALE : NONE

PAVEMENT THICKNESS SCHEDULE FOR CONVENTIONALLY REINFORCED AND JOINTED PCC PAVEMENT IN MEDIUM-DUTY PAVEMENT AREAS- ACCESS DRIVE & CIRCULATION LANES WITHIN PARKING AREAS (BASED ON SOIL REPORT)

THICKNESS (in)	MATERIAL DESCRIPTION
6.0	REINFORCED CONCRETE SURFACE COURSE
6.0	COMPACTED CHEMICALLY-STABILIZED SUBGRADE SOILS
12.0	TOTAL CONSTRUCTED PAVEMENT THICKNESS

PAVEMENT THICKNESS SCHEDULE FOR CONVENTIONALLY REINFORCED AND JOINTED PCC PAVEMENT IN LIGHT-DUTY PAVEMENT AREAS - PASSENGER VEHICLE PARKING AREAS (BASED ON SOIL REPORT)

THICKNESS (in)	MATERIAL DESCRIPTION
5.0	REINFORCED CONCRETE SURFACE COURSE
6.0	COMPACTED CHEMICALLY-STABILIZED SUBGRADE SOILS
11.0	TOTAL CONSTRUCTED PAVEMENT THICKNESS

GENERAL CONSTRUCTION NOTES

IT SHALL BE THE GENERAL CONTRACTOR'S RESPONSIBILITY TO NOTIFY, PROVIDE INFORMATION, AND COORDINATE WITH THE CITY/COUNTY UTILITY DEPARTMENTS AND OTHER UTILITY COMPANIES REGARDING THE LOCATION, DEPTHS, SIZES AND ANY RELEVANT INFORMATION OF ALL PROPOSED ABOVE AND UNDERGROUND UTILITIES INCLUDING GAS, FIBER OPTIC, COMMUNICATION CABLES AND THE LIKE, PRIOR TO PERFORMING ANY DIRT WORK, EXCAVATION, EMBANKMENT FILL OR HOLE DRILLING RELATED TO ONSITE OR OFF SITE WORK FOR THIS PROJECT.

OWNERSHIP AND USE OF DRAWINGS

THESE DRAWINGS WHETHER PRINTED OR ELECTRONIC IN FORM, PREPARED BY THE ENGINEER / JR EISENHOUR CONSULTING LLC, ARE INSTRUMENTS OF SERVICE THROUGH WHICH THE CONTRACTOR SHALL EXECUTE THE WORK DESCRIBED HEREIN. ONLY THE ENGINEER SHALL OWN, CLAIM AUTHORSHIP, CLAIM COPYRIGHT OR RETAIN ANY OTHER RESERVED RIGHTS ON THESE DRAWINGS UNLESS OTHERWISE AGREED TO OR PERMITTED IN WRITING BY THE ENGINEER. THESE DRAWINGS SHALL NOT BE COPIED.

THESE DRAWINGS SHALL BE USED SOLELY FOR THIS PROJECT. THE CONTRACTOR, SUBCONTRACTOR, MATERIAL OR EQUIPMENT SUPPLIER ARE PERMITTED TO USE OR REPRODUCE PORTION(S) OF THE DRAWINGS RELATIVE TO THIER PERFORMANCE CONTRACT AS SPECIFIED IN THE CONTRACT DOCUMENTS.

THESE DRAWINGS SHALL NOT BE USED BY THE CONTRACTOR, SUBCONTRACTOR, MATERIAL OR EQUIPMENT SUPPLIER ON OTHER PROJECTS OR ON ADDITIONS TO THIS PROJECT OUTSIDE THE ORIGINAL SCOPE OF WORKS WITHOUT THE SPECIFIC WRITTEN CONSENT

OFFICIAL SUBMISSION OF THESE PLANS TO REGULATORY AGENCIES SHALL ONLY MEAN COMPLIANCE TO REGULATORY REQUIREMENTS AND SHALL NOT BE CONSTRUED AS PUBLICATION OR LOSS OF ENGINEER'S COPYRIGHT'S OR OTHER RESERVED RIGHTS.

EISENHOUR Consulting, LLC
1044-Morningside Court
Mesquite, TX. 75150
Cell No: 972.415.1730
TeleFax: 214.501.2697

PROJECT NAME:

PAVING AND JOINTING PLAN
PROP. 2 - STORY INDEPENDENT MOTEL
SYMPHONY PARK DRIVE,
CITY OF BRYAN
1.236 ACRES

OWNER/DEVELOPER :

A & M DEVELOPERS
7701 LAS COLINAS RIDGE, SUITE 250
IRVING, TEXAS 75063

ENGINEER COMPANY:

E.M. FAGGET ENGINEERING
P.O. BOX 17605
FORT WORTH, TEXAS 76102

PROJECT STATUS: FOR PERMITTING
PROJECT MANAGER: FREDERICK L. GATELA
DESIGN COORDINATOR: -
REVISION DATE: 11/01/14
PLOT DATE: 11/01/14
DRAWING BY: -

ENGINEER'S SIGNED/SEALED:

DATE

ON THE DATE INDICATED HEREIN. ALTERATION OF A SEALED DOCUMENT WITHOUT PROPER NOTIFICATION TO THE RESPONSIBLE ENGINEER IS AN OFFENSE UNDER THE TEXAS ENGINEERING ACT.

SHEET: C4

OF: 12

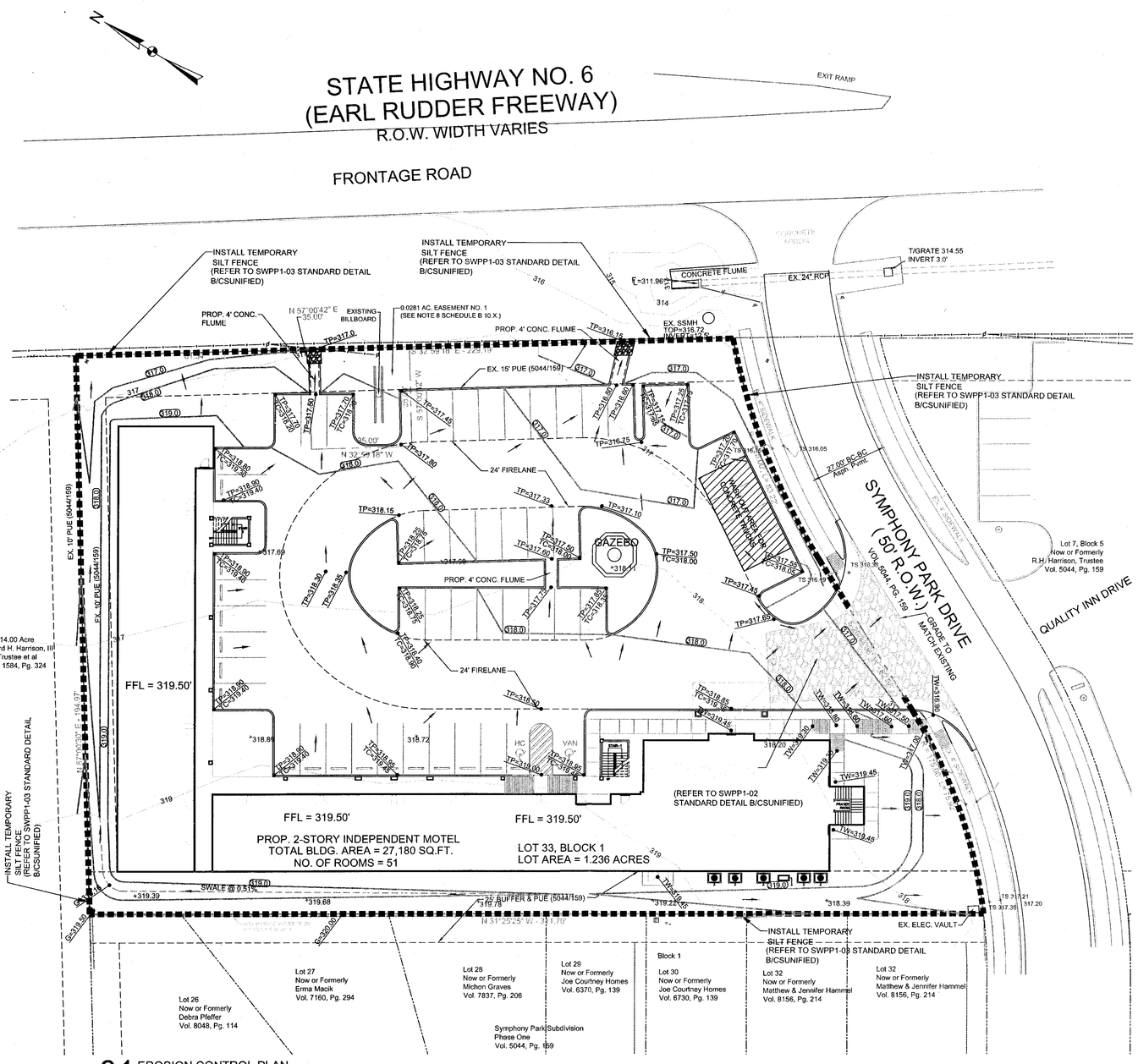

01 EROSION CONTROL PLAN

SCALE: 1" = 20'-0"

GRAPHIC SCALE

0 20 10 40

STANDARD GENERAL NOTES

1. EROSION CONTROL DEVICES AS SHOWN ON THE EROSION CONTROL PLAN FOR THE PROJECT SHALL BE INSTALLED PRIOR TO THE START OF LAND DISTURBING ACTIVITIES ON THE PROJECT.
2. ALL EROSION CONTROL DEVICES ARE TO BE INSTALLED IN ACCORDANCE WITH THE APPROVED PLANS AND SPECIFICATIONS FOR THE PROJECT. CHANGES ARE TO BE APPROVED BEFORE CONSTRUCTION BY THE DESIGN ENGINEER AND THE CITY OF BRYAN ENGINEERING DIVISION.
3. IF THE EROSION CONTROL PLAN AS APPROVED CANNOT CONTROL EROSION AND OFF-SITE SEDIMENTATION FROM THE PROJECT THE EROSION CONTROL PLAN WILL BE REQUIRED TO BE REVISED AND OR ADDITIONAL EROSION CONTROL DEVICES WILL BE REQUIRED ON SITE.
4. IF OFF-SITE SOIL BORROW OR SPOIL SITES ARE USED IN CONJUNCTION WITH THIS PROJECT, THIS INFORMATION SHALL BE DISCLOSED AND SHOWN ON THE EROSION CONTROL PLAN. OFF-SITE BORROW AND SPOIL AREAS ARE CONSIDERED A PART OF THE PROJECT SITE AND THEREFORE SHALL COMPLY WITH THE CITY OF BRYAN EROSION CONTROL REQUIREMENTS. THESE AREAS SHALL BE STABILIZED WITH PERMANENT GROUND COVER PRIOR TO FINAL APPROVAL OF THE PROJECT.

LEGEND

SANITARY SEWER MANHOLE	SS	500	EXISTING CONTOURS
STORM SEWER MANHOLE	MH	500	PROPOSED CONTOURS
CLEAN OUT	CO	SS SS	PROPOSED SANITARY SEWER PIPE
FIRE HYDRANT	FH		
POWER POLE	PP	E,SS	EXISTING SANITARY SEWER PIPE
TELEPHONE BOX	TB		PROPOSED WATER LINE
WATER METER	WM	E,W E,W	EXISTING WATER LINE
GATE VALVE	GV		
LIGHT POLE		E E	PROPOSED POWER LINE
RIGHT OF WAY	R.O.W		EXISTING POWER LINE
EXIST. LIGHTPOLE		T T	PROPOSED TELEPHONE LINE
DRAINAGE & UTILITY EASEMENT	DE/UE		
TOP OF SIDEWALK	TSW	E,T E,T	EXISTING TELEPHONE LINE
TOP OF CURB	TC		
TOP OF PAVEMENT	TP	GAS GAS	PROPOSED GAS LINE
		E,GAS	EXISTING GAS LINE

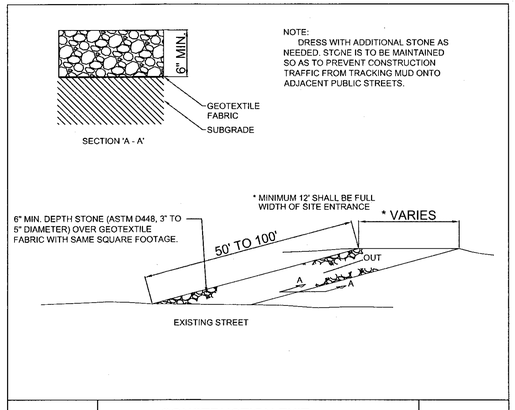

CITY OF BRYAN	CONSTRUCTION EXIT SPLIT CONTROL			CITY OF COLLEGE STATION
	DATE: AUG. 2012	B/CS UNIFIED STANDARD DETAIL	DETAIL NO. SWPP1-02	

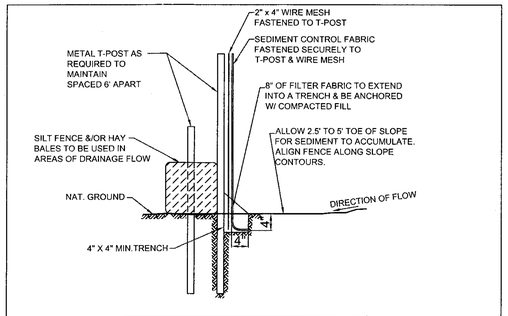

CITY OF BRYAN	SILT FENCE ASSEMBLY			CITY OF COLLEGE STATION
	DATE: AUG. 2012	B/CS UNIFIED STANDARD DETAIL	DETAIL NO. SWPP1-03	

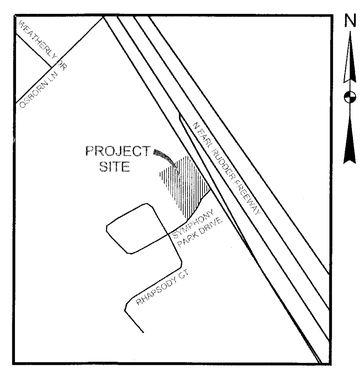

VICINITY MAP SCALE : NONE

GENERAL CONSTRUCTION NOTES

IT SHALL BE THE GENERAL CONTRACTOR'S RESPONSIBILITY TO NOTIFY, PROVIDE INFORMATION, AND COORDINATE WITH THE CITY/COUNTY UTILITY DEPARTMENTS AND OTHER UTILITY COMPANIES REGARDING THE LOCATION, DEPTHS, SIZES AND ANY RELEVANT INFORMATION OF ALL PROPOSED ABOVE AND UNDERGROUND UTILITIES INCLUDING GAS, FIBER OPTIC, COMMUNICATION CABLES, AND THE LINE, PRIOR TO PERFORMING ANY DIRT WORK, EXCAVATION, EMBANKMENT FILL OR HOLE DRILLING RELATED TO ONSITE OR OFF SITE WORK FOR THIS PROJECT.

OWNERSHIP AND USE OF DRAWINGS

THESE DRAWINGS WHETHER PRINTED OR ELECTRONIC IN FORM, PREPARED BY THE ENGINEER / JR EISENHOUR CONSULTING LLC, ARE INSTRUMENTS OF SERVICE THROUGH WHICH THE CONTRACTOR SHALL EXECUTE THE WORK DESCRIBED HEREIN. ONLY THE ENGINEER SHALL OWN, CLAIM AUTHORSHIP, CLAIM COPYRIGHT OR RETAIN ANY OTHER RESERVED RIGHTS ON THESE DRAWINGS UNLESS OTHERWISE AGREED TO OR PERMITTED IN WRITING BY THE ENGINEER. THESE DRAWINGS SHALL NOT BE COPIED.

THESE DRAWINGS SHALL BE USED SOLELY FOR THIS PROJECT. THE CONTRACTOR, SUBCONTRACTOR, MATERIAL OR EQUIPMENT SUPPLIERS ARE PERMITTED TO USE OR REPRODUCE PORTION(S) OF THE DRAWINGS RELATIVE TO THEIR PERFORMANCE CONTRACT AS SPECIFIED IN THE CONTRACT DOCUMENTS.

THESE DRAWINGS SHALL NOT BE USED BY THE CONTRACTOR, SUBCONTRACTOR, MATERIAL OR EQUIPMENT SUPPLIER ON OTHER PROJECTS OR ON ADDITIONS TO THIS PROJECT OUTSIDE THE ORIGINAL SCOPE OF WORKS WITHOUT THE SPECIFIC WRITTEN CONSENT

OFFICIAL SUBMISSION OF THESE PLANS TO REGULATORY AGENCIES SHALL ONLY VIEW COMPLIANCE TO REGULATORY REQUIREMENTS AND SHALL NOT BE CONSTRUED AS PUBLICATION OR LOSS OF ENGINEERS COPYRIGHTS OR OTHER RESERVED RIGHTS.

PRINCIPLES OF EROSION AND SEDIMENTATION

3.1 GENERAL

THE MOST EFFECTIVE MEANS OF REDUCING THE SOIL LOST FROM PROPERTY IS TO PREVENT THE EROSION OF THE SOIL. STRUCTURAL BARRIERS CAN PROVIDE 70% TO 90% SEDIMENT REMOVAL EFFICIENCIES FROM RUNOFF, BUT A NATURAL GROUNDCOVER AND MULCHING CAN PROVIDE 90% TO 98% REDUCTION IN EROSION AND SOIL LOSS.

3.2 EROSION PROCESS

EROSION IS NATURAL PROCESS BY WHICH SOIL AND ROCK IS LOOSENED AND REMOVED BY THE ACTION OF WATER OR WIND. THE PRIMARY FOCUS OF THIS MANUAL IS THE CONTROL OF EROSION AND SEDIMENTATION CAUSED BY SURFACE WATER RUNOFF. CONSTRUCTION-SITE EROSION HAS BEEN SHOWN TO BE IN MOST CASES, THE MOST EXCESSIVE FORM OF EROSION KNOWN CAUSING SERIOUS AND COSTLY PROBLEMS, BOTH ON-SITE AND OFF-SITE.
RUNOFF, WATER MOVING OVER THE SOIL SURFACE, IS CAUSED BY RAIN WATER FALLING AT A FASTER RATE THAN IT CAN BE ABSORBED BY THE SOIL. THE RUNOFF WATER DETACHES AND TRANSPORTS SOIL PARTICLES FROM ONE LOCATION TO ANOTHER. THE EROSIVENESS OF FLOWING WATER DEPENDS UPON ITS VELOCITY, TURBULENCE, PLUS THE AMOUNT AND TYPE OF ABRASIVE MATERIAL IT TRANSPORTS. THE HIGHER THE VELOCITY OF RUNOFF, THE HIGHER THE NUMBER OF SOIL PARTICLES THAT CAN BE TRANSPORTED.
THE POTENTIAL FOR AN AREA TO ERODE IS RELATED TO FOUR FACTORS: SOIL TYPE, SURFACE COVER, TOPOGRAPHY AND CLIMATE.
THE SOIL TYPE HAS A DIRECT IMPACT ON THE ERODIBILITY OF THE SOIL. KEY FACTORS THAT AFFECT THE ERODIBILITY OF A TYPE SOIL ARE THE SOIL TEXTURE, THE ORGANIC MATTER CONTENT, THE TYPE OF SOIL STRUCTURE, AND THE PERMEABILITY OF THE SOIL.
SURFACE COVER PRIMARILY IN THE FORM OF VEGETATION, SHIELDS THE SOIL SURFACE FROM THE IMPACT OF FALLING RAIN, REDUCES RUNOFF VELOCITY AND SPREADS OUT THE FLOW OF WATER.
TOPOGRAPHIC FEATURES SUCH AS THE SIZE OF DRAINAGE BASINS AND THE STEEPNESS OF SLOPES DIRECTLY AFFECT RUNOFF RATES AND VOLUMES.
CLIMATE, PARTICULARLY THE FREQUENCY, INTENSITY, AND DURATION OF RAINFALL ARE PRIMARY FACTORS THAT DETERMINE THE AMOUNT OF RUNOFF PRODUCED.

3.3 EROSION CONTROL

EFFECTIVE EROSION CONTROL ADDRESSES THE PREVENTION OF SOIL EROSION BY PROTECTING THE SOIL SURFACE FROM EROSIVE FORCES OF RAIN AND RUNOFF. PREVENTION OF EROSION IS ALWAYS BETTER THAN REMEDIAL MEASURES AND SHOULD RECEIVE PRIORITY IN ANY EROSION AND SEDIMENTATION CONTROL PLAN. SOIL EROSION CANNOT BE COMPLETELY PREVENTED, AS SOME NATURAL EROSION OCCURS ON THE LANDSCAPE UNDER IDEAL CONDITIONS. THE IDEA IS TO PREVENT ACCELERATED EROSION TO THE EXTENT PRACTICABLE. THE FOLLOWING PRACTICES CAN BE USED TO PREVENT EROSION:

- PLAN THE DEVELOPMENT TO FIT THE SITE TOPOGRAPHY (AVOID HIGHLY EROSIVE AREAS).
- MINIMIZE THE DURATION AND SIZE OF AREA EXPOSED WITHOUT GROUND COVER.
- PROTECT EXPOSED GROUND AREAS FROM OFF-SITE RUNOFF.
- STABILIZE EXPOSED GROUND AREAS AS SOON AS POSSIBLE.
- REDUCE RUNOFF VELOCITIES WHENEVER POSSIBLE.
- PROTECT STEEP SLOPES FROM EXCESSIVE RUNOFF.

PROJECT PHASING, PARTICULARLY ON LARGE PROJECTS, CAN BE CRITICAL TO SUCCESSFUL EROSION CONTROL. THE MINIMIZING OF DISTURBED LAND AREA.

3.4 SEDIMENTATION PROCESS

SEDIMENTATION IS THE DEPOSITION OF SOIL PARTICLES THAT HAVE BEEN TRANSPORTED BY RUNOFF. THE AMOUNT AND SIZE OF THE MATERIAL THAT BE TRANSPORTED INCREASES WITH THE VELOCITY OF THE RUNOFF.
SEDIMENTATION OCCURS WHEN THE RUNOFF SLOWS DOWN ENOUGH AND FOR ALONG ENOUGH PERIOD OF TIME TO ALLOW THE SUSPENDED SOIL TO SETTLE FROM THE RUNOFF. GRAVEL AND SAND PARTICLES ARE USUALLY NOT TRANSPORTED VERY FAR BY RUNNING WATER AND ARE DEPOSITED WHEN THE WATER FIRST SLOWS DOWN. CONVERSELY, SOME VERY SMALL CLAY PARTICLES MAY NOT SETTLE OUT EVEN WHEN THE WATER STOPS MOVING. THIS IS BECAUSE THE PARTICLES ARE HELD IN SUSPENSION.

3.5 SEDIMENTATION CONTROL

SEDIMENTATION CONTROL IS REMEDIAL MEASURE THAT INVOLVE TRAPPING SEDIMENT AS RUNOFF LEAVES THE LAND DURING STORM EVENTS. MOST SEDIMENTATION CONTROL IS ACHIEVED THROUGH THE USE OF STRUCTURAL CONTROLS, SOMETIMES REFERRED TO AS BEST MANAGEMENT PRACTICES (BMPs). EFFECTIVE SEDIMENTATION CONTROL REQUIRES THAT THE MAJORITY OF THE ERODED SOIL BE CAPTURED ON-SITE. CHAPTER 5 OF THIS MANUAL PROVIDES THE USER WITH AN INVENTORY OF BMPs, THAT WHEN PROPERLY USED, INSTALLED AND MAINTAINED WILL EFFECTIVELY CONTROL SEDIMENTATION FROM A CONSTRUCTION SITE. BMPs ARE GENERALLY APPLICABLE TO A SPECIFIC SITEV SITUATION AND THE EROSION CONTROL PLAN FOR A SITE SHOWS THE CORRECT BMP TO CONTROL OFF-SITE SEDIMENTATION.

EISENHOUR Consulting, LLC
1044-Morningside Court
Mesquite, TX. 75150
Cell No: 972.415.1730
TeleFax: 214.501.2697

PROJECT NAME:

EROSION CONTROL PLAN
PROP. 2 - STORY INDEPENDENT MOTEL
SYMPHONY PARK DRIVE,
CITY OF BRYAN
1.236 ACRES

OWNER/DEVELOPER :

A & M DEVELOPERS
7701 LAS COLINAS RIDGE, SUITE 250
IRVING, TEXAS 75063

ENGINEER COMPANY:

E.M. FAGGET ENGINEERING
P.O. BOX 17605
FORT WORTH, TEXAS 76102

PROJECT STATUS: FOR PERMITTING	ENGINEER'S SIGNED/SEALED:	SHEET:
PROJECT MANAGER: FREDERICK L. GATELA		C6
DESIGN COORDINATOR: -	DATE:	OF: 12
REVISION DATE: 11/01/14	ON THE DATE INDICATED HEREIN ALTERATION OF A SEALED DOCUMENT WITHOUT PROPER NOTIFICATION TO THE RESPONSIBLE ENGINEER IS AN OFFENSE UNDER THE TEXAS ENGINEERING ACT.	
PLOT DATE: 11/01/14		
DRAWING BY: -		