PROPOSED SITE AND UTILITY IMPROVEMENTS

CLARK'S LANE SITE PLAN

BRYAN, BRAZOS COUNTY, TEXAS

MAY 2015

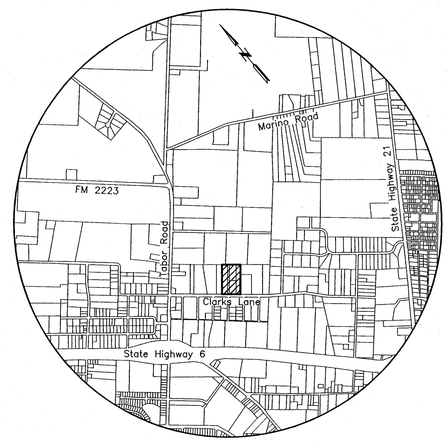

VICINITY MAP

Developer:
PITMAN ENTERPRISES, LLC
4318 ROCK BEND DRIVE
College Station, TX 77845
(979) 492-6457

Prepared By:
McClure & Browne
Engineering/Surveying, Inc.
1008 Woodcreek Drive, Suite 103
College Station, Texas 77845
(979) 693-3838

LEGEND

- Electrical Manhole
- Fire Hydrant
- Gas Manhole
- Gas Meter
- Guy Anchor
- Iron Pipe Found
- Iron Rod Found
- Iron Rod Set
- Light Pole
- Power Pole
- Sewer Clean-Out
- Sewer Manhole
- Sprinkler Head
- Storm Drain Manhole
- Street Sign
- TBM
- Telephone Manhole
- Telephone Pedestal
- Traverse Point
- Water Meter
- Water Valve
- Blackjack Tree
- Cedar Tree
- Elm Tree
- Mesquite
- Pine Tree
- Post Oak
- Water Oak Tree

+95.05 / 309.12	– Station – Top of Curb Elevation
SD1.01	Proposed Drainage Structure No.
WA1.01	Indicates Proposed Water Structure Identifier
WS1.01	Indicates Proposed Water Service Line Number
SE1.01	Indicates Proposed Sewer Structure Identifier
SS1.01	Indicates Proposed Sewer Service Line Number
	Ambulatory Ramp
	Prop. Handicapped Parking Sign
	Straw Bale Barrier
	Inlet Protection
	Prop. Drainage Structure w/Culvert Inlet Protection
14	Prop. Inlet / Storm Drain
	Drainage Flow
	℄ Drainage Ditch
Straw Bale	Indicated Drainage Flow w/Straw Bale Barrier
	Prop. Hose Bib
P	Pipeline
G	Gas Line
T	Telephone Cable
FO	Fiber Optics Cable
OE	Overhead Electrical Line
UE	Underground Electric Line
UU	Underground Utilities
8S	Ex. Sewer Line w/ size
8S	Prop. Sewer Line w/ size
8W	Ex. Water Line w/ size
8W	Prop. Waterline & Fire Hydrant
SF	Prop. Silt Fence
224	Ex. Ground Contour Line
224	Prop. Finish Grade Contour
X	Wire Fence
	Chain Link Fence
	Pipe Fence w/ Cable
	Subdivision Boundary
	Prop. R.O.W. Line
	Easement Lines

ABBREVIATIONS

BC	BUILDING CORNER	±	PLUS OR MINUS
BM	BENCHMARK	PC	POINT OF CURVATURE
CFS	CUBIC FEET PER SECOND	PRC	POINT OF REVERSE CURVATURE
℄	CENTERLINE	PCC	POINT OF COMPOUND CURVATURE
CMP	CORRUGATED METAL PIPE	ℙ	PROPERTY LINE
CONC.	CONCRETE	PROP.	PROPOSED
Δ	DELTA	PT	POINT OF TANGENCY
ø	DIAMETER	P.D.E.	PUBLIC DRAINAGE EASEMENT
DIA	DIAMETER	P.U.E.	PUBLIC UTILITY EASEMENT
DIP	DUCTILE IRON PIPE	PVC	POLYVINYL CHLORIDE
ELEV.	ELEVATION	R	RADIUS
E.O.P.	EDGE OF PAVEMENT	R.O.W.	RIGHT OF WAY
EX.	EXISTING	SD	STORM DRAIN
F.F	FINISHED FLOOR	SF	SQUARE FEET
F.H.	FIRE HYDRANT	SS	SEWER SERVICE
℄	FLOW LINE	S.Y.	SQUARE YARD
FT.	FOOT (FEET)	STA.	STATION
GALV.	GALVANIZED	STD.	STANDARD
H.P.	HIGH POINT	SW	SIDEWALK
HGL	HYDRAULIC GRADE LINE	TBM.	TEMPORARY BENCHMARK
IN.	INCH	TC	TOP OF CURB
L.F.	LINEAR FEET	TG	TOP OF GRATE
L.P.	LOW POINT	TI	TOP OF INLET
MH	MANHOLE	TMH	TOP OF MANHOLE
MIN.	MINIMUM	TP	TOP OF PAVEMENT
MISC.	MISCELLANEOUS	TS	TOP OF SIDEWALK
NG	NATURAL GROUND	TEL.	TELEPHONE
N.T.S.	NOT TO SCALE	VPC	VERTICAL POINT OF CURVATURE
OC	ON CENTER	VPI	VERTICAL POINT OF INTERSECTION
OCEW	ON CENTER EACH WAY	VPT	VERTICAL POINT OF TANGENCY
O.D.	OUTSIDE DIAMETER	WS	WATER SERVICE

STATE OF TEXAS
JEFFERY L. ROBERTSON
94745
LICENSED
PROFESSIONAL ENGINEER

ISSUED FOR BIDDING AND CONSTRUCTION.

DATE: MAY 2015
DRAWN BY: KW
DESIGNED BY: JLR
CHECKED BY: JLR
10980002-001-00

REVISIONS

McCLURE & BROWNE
ENGINEERING/SURVEYING, INC.
Engineer Reg. No. F-458 · Survey Reg. No. 101033-00
1008 Woodcreek Dr., Suite 103
College Station, Tx. 77845 · (979) 693-3838
1314 10th Street, Suite 210
Huntsville, Tx. 77320 · (936) 294-9749

Index

CLARKS LANE SITE PLAN

SHEET NO.

C0.0

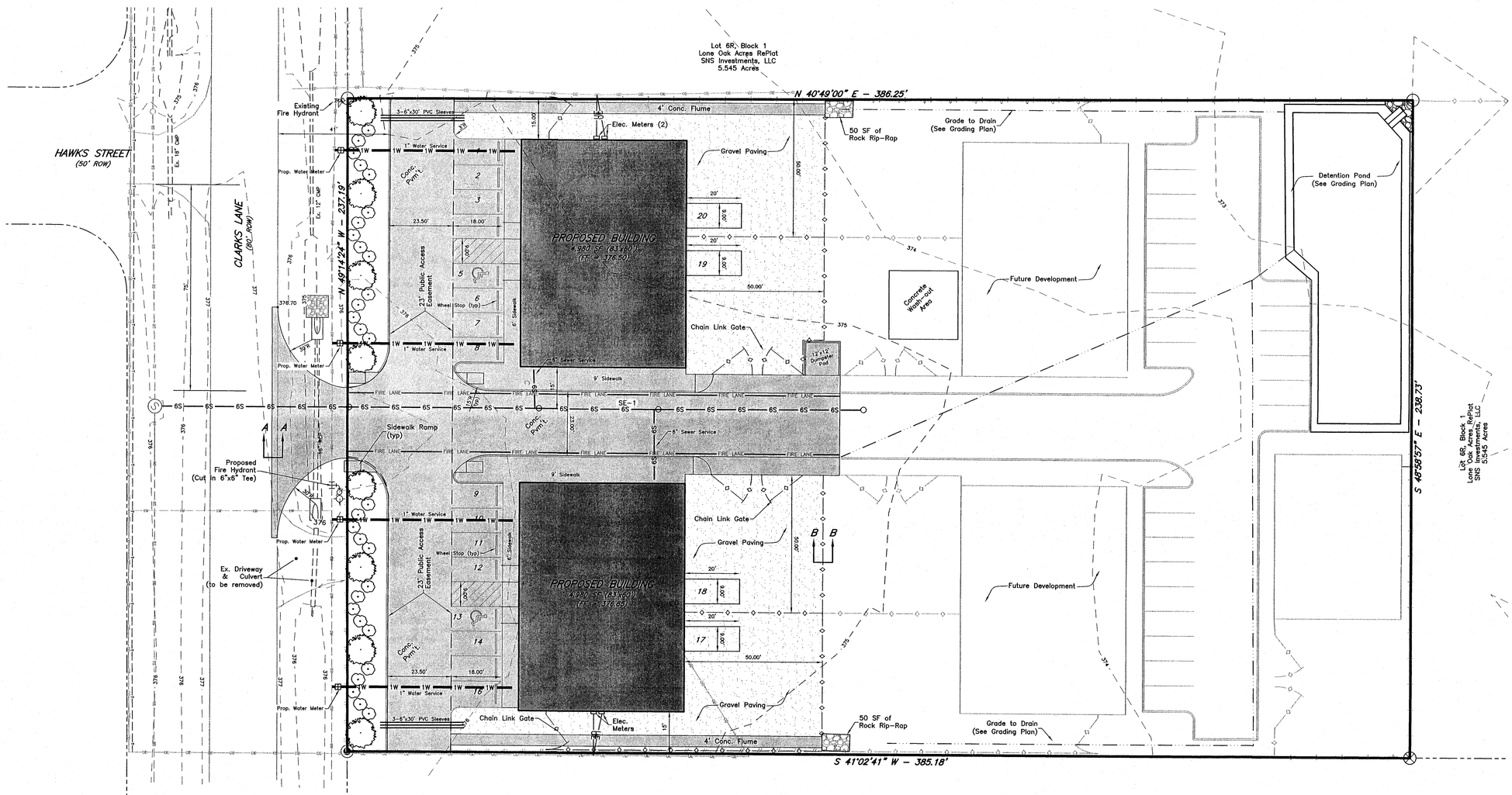

SITE & LANDSCAPE PLAN

SCALE: Hor: 1" = 20'
0 10' 20'

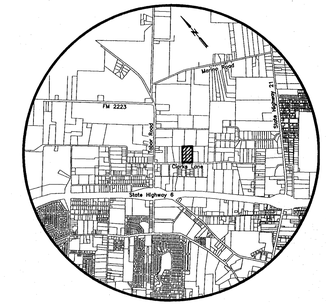

VICINITY MAP

GENERAL NOTES:

1. This property is currently Zoned Industrial
2. Owner & Applicant:
   Pitman Enterprises LLC
   4318 Rock Bend Dr.
   College Station, Texas 77845
   (979) 492-6457
3. Proposed Use: Office and Warehouse
   Gross Square Footage (Heated): 9,960 SF
   BUILDING IS NOT SPRINKLED
4. Parking Analysis:
   Parking Spaces Required = 1 space/300 sf office
   1 space/600 sf warehouse
   400 sf office / 300 = 1.25 spaces
   9,560 sf warehouse / 600 = 15.93 spaces
   Total Required = 17.18 ~ 18 spaces
   Parking Spaces Provided = 20
6. WATER AND SANITARY SEWER DEMANDS:
   Water Demands: Max.= 4 GPM Avg.= 1 GPM
   Min.= 0 GPM
   Irrigation: Max.= 20 GPM
   Sewer Demands: 2,880 GPD (Max.)
7. According to the Flood Insurance Rate Maps for Brazos County, Texas and Incorporated Areas, Map Numbers 48041C0205F, effective April 2, 2014. This property is not located in the 100 Year Flood Hazard Area.
8. Abbreviations: P.U.E. – Public Utility Easement
9. The contractor shall be responsible for the containment and proper disposal of all liquid and solid waste associated with this project. The contractor shall use all means necessary to prevent the occurrence of wind blown litter from the project site.
10. Demolition/Construction Waste – Site is required to provide containment for waste prior to and during demolition/construction. Solid waste roll off boxes and/or metal dumpsters shall be supplied by City or City permitted contractor(s) only.
11. Type of waste streams generated at this site: Normal Domestic Wastewater
12. Irrigation System – Potable water supply must be protected by either an atmospheric or pressure vacuum breaker, or testable double check valve assembly, and install per City Ordinance.
13. Potable Water Protection – All devices, appurtenances, appliances and apparatus intended to serve some special function and that connects to the water supply system, shall be provided with protection against backflow and contamination of the water supply system.
14. All signage will be permitted separately.

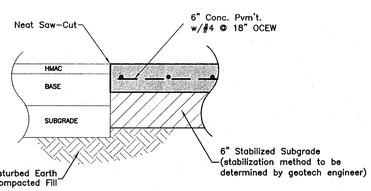

SECTION A–A

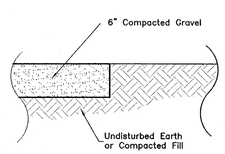

SECTION B–B

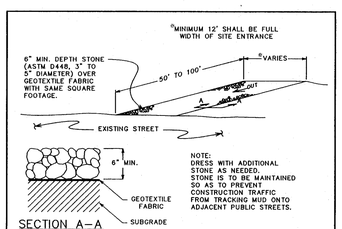

SECTION A–A

CONSTRUCTION EXIT SILT CONTROL

SWPP1–02

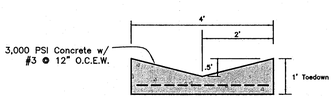

TYPICAL FLUME SECTION

EXPANSION JOINTS @ 60' O.C.
CONTRACTION JOINTS @ 20' O.C.

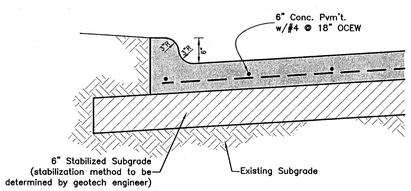

TYPICAL PAVING SECTION

LANDSCAPE NOTES

1. AN IRRIGATION SYSTEM TO SERVICE ALL NEW PLANTING MUST BE APPROVED BY CITY AND INSTALLED BY A CERTIFIED INSTALLER PRIOR TO ISSUE OF CERTIFICATE OF OCCUPANCY.

PROPOSED PLANT SPECIES

	COMMON NAME	BOTANICAL NAME
	Canopy Trees to be used: Live Oak	Quercus virginiana
	Non-Canopy Trees to be used: Crepe Myrtle	Lagerstroemia Indica
	Ground Cover to be used: Bermuda Turf Grass	Cynodon dactylon
	Proposed shrubs to be used: Indian Hawthorn	Rapheolepis indica

LANDSCAPE REQUIREMENTS

	QTY.	POINT VALUE	COMMON NAME	SIZE	POINTS
	8	200	Canopy Trees	2"	1,600
	30	10	Shrub	2 gal.	300
	1,955	10 / 100sf	Grass	39,934(0.15)(0.15) = 898 (max. allowed)	196
TOTAL POINTS PROPOSED:					2,096
SITE AREA: 39,934 S.F.			POINTS REQ'D: 91,780*.05 = 1,997		

SITE & LANDSCAPE PLAN

CLARKS LANE

LOT 1R, BLOCK 2
LONE OAK ACRES
SUBDIVISION
2.107 ACRES
BRYAN, BRAZOS COUNTY, TEXAS
SUBMITTED: MAY 2015
SCALE: 1" = 20'

Owner:
Pitman Enterprises, LLC
4318 Rock Bend Dr.
College Station, Tx 77845
979-492-6457

Prepared By:
McClure & Browne Engineering/Surveying, Inc.
1008 Woodcreek Dr., Suite 103
College Station, Texas 77845
(979) 693-3838

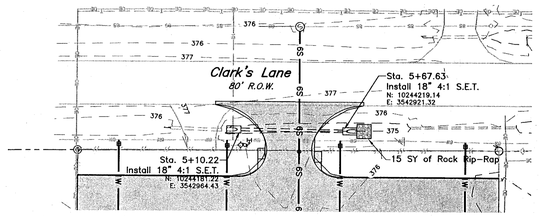

STORM DRAIN SD-1

SCALE: Hor: 1" = 40'
Vert: 1" = 4'

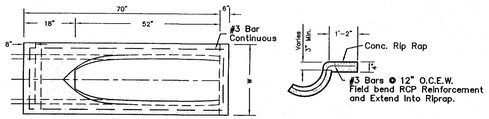

SECTION C-C

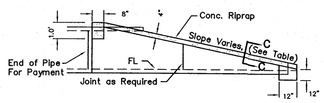

SLOPED CONCRETE HEADWALL DETAILS

Conc. Riprap Shall be Included in Bid Price for Each Headwall
NTS

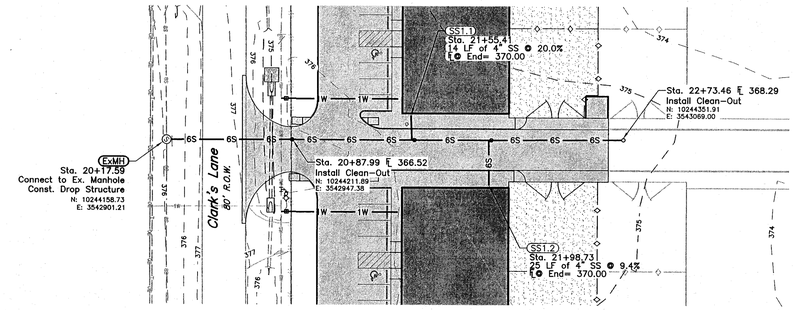

SEWER LINE SE-1

SCALE: Hor: 1" = 40'
Vert: 1" = 4'

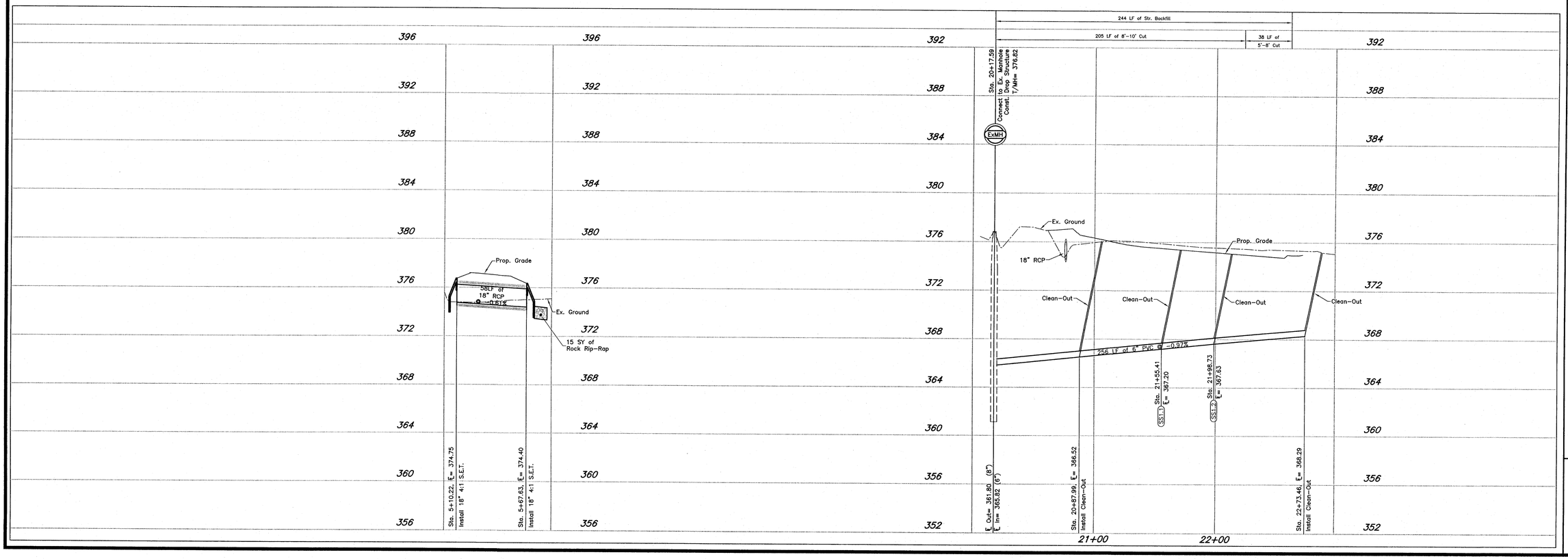

STATE OF TEXAS
JEFFERY L. ROBERTSON
94745
LICENSED
PROFESSIONAL ENGINEER

ISSUED FOR BIDDING AND CONSTRUCTION.

DATE: APRIL 2015
DRAWN BY: KM
DESIGNED BY: JLR
CHECKED BY: JLR
10980002-001-01

REVISIONS

McCLURE & BROWNE
ENGINEERING/SURVEYING, INC.
Engineer Reg. No. F-458 · Survey Reg. No. 101033-00
1008 Woodcreek Dr., Suite 103
College Station, Tx. 77845 · (979) 693-3838
1314 10th Street, Suite 210
Huntsville, Tx. 77320 · (936) 294-9749

UTILITY LINES
Plan and Profile
Clark's Lane Site Plan

SHEET NO.
C1.1

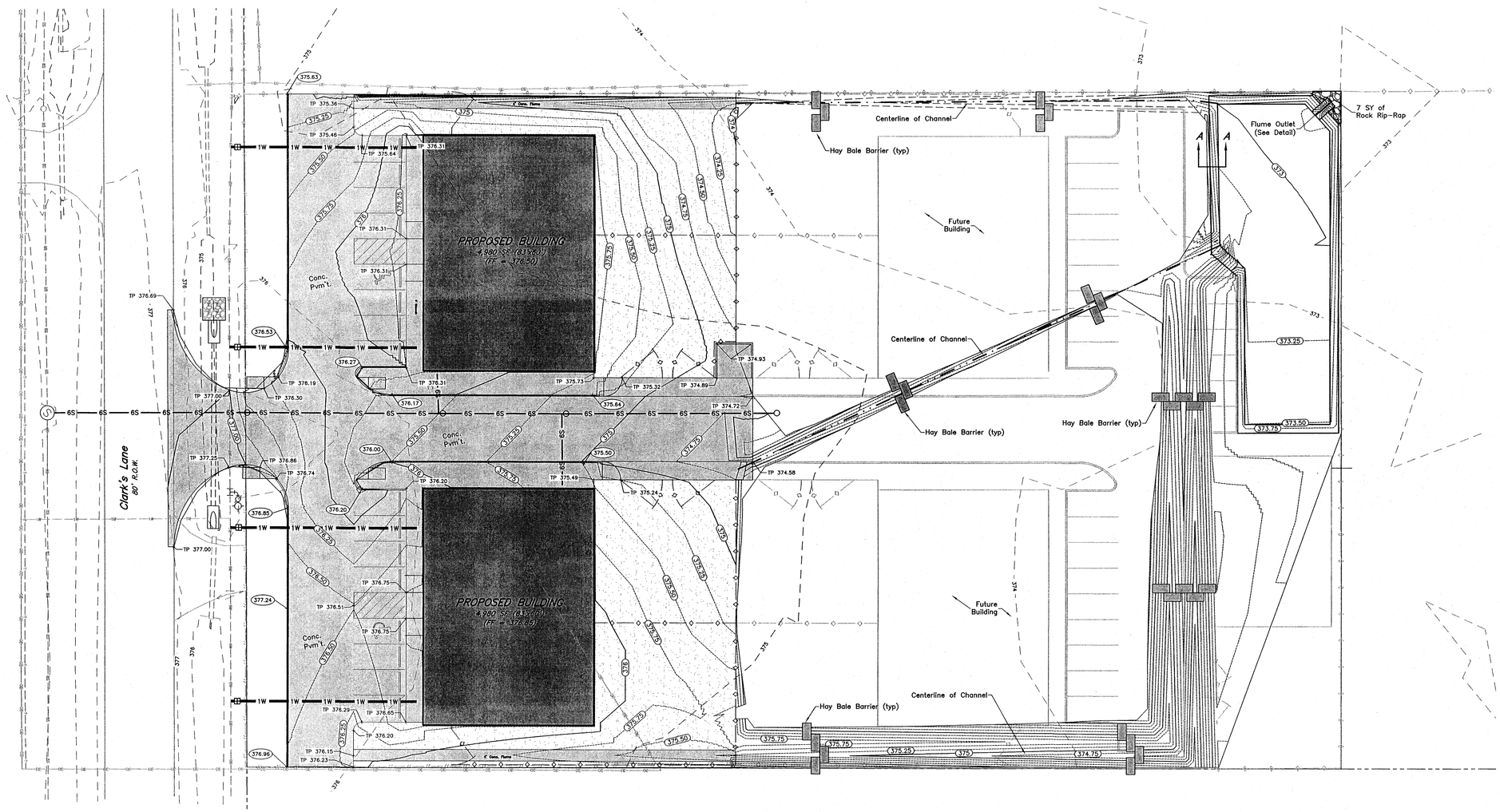

GRADING PLAN

SCALE: Hor: 1" = 10'

0 5' 10' 20'

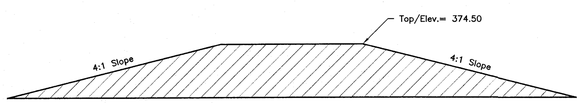

SECTION A–A

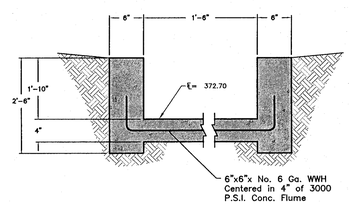

OUTLET DETAIL

STATE OF TEXAS
7/1/2015
JEFFERY L. ROBERTSON
94745
LICENSED PROFESSIONAL ENGINEER

ISSUED FOR BIDDING AND CONSTRUCTION.

DATE: APRIL 2015
DRAWN BY: KM
DESIGNED BY: JLR
CHECKED BY: JLR
100000-00-02

REVISIONS

McCLURE & BROWNE ENGINEERING/SURVEYING, INC.
Engineer Reg. No. F-458 Survey Reg. No. 101033-00
1008 Woodcreek Dr., Suite 103
College Station, Tx. 77845 · (979) 693-3838
1314 10th Street, Suite 210
Huntsville, Tx. 77320 · (936) 294-9749

GRADING PLAN

Clark's Lane Site Plan

SHEET NO.

C1.2

NOTES:

1. A MAX. OF 4 AND A MIN. OF 2 THROAT RINGS SHALL BE UBED AT EACH MANHOLE IN NEW OR EXISTING RIGHT-OF-WAY.
2. USE ADEKA SEALANT OR APPROVED EQUAL BETWEEN RING/COVER, ADJUSTMENT RINGS AND CHIMNEY OR CORBEL/CONE SECTION.
3. MANHOLE BASE THICKNESS AND FOUNDATION FROM FLOWLINE TO RIM AS FOLLOWS:

MANHOLE DEPTH (FT.)	BASE THICKNESS
0 - 12	8"
12 AND OVER	12"

4. MANHOLE LOCATION AND COMPACTION AS FOLLOWS:

LOCATION	COMPACTION REQUIREMENT.
PAVEMENT	98 % STANDARD PROCTOR - ASTM D 698
LANDSCAPE AREA	90 % STANDARD PROCTOR - ASTM D 698

5. NO RINGS ARE REQUIRED OUTSIDE OF STREET RIGHT-OF-WAY
6. IN FLOODPLAINS OR AREAS OF CONCENTRATED FLOW, THE CONE SHALL EXTEND 1 FOOT ABOVE THE BASE FLOOD ELEVATION OR A BOLT DOWN, WATER-TIGHT RING AND COVER SHALL BE USED, VENTED WHERE REQUIRED.
7. WARNING SIGN ONLY TO BE PLACED WHERE SEWER CROSSES OPEN FIELDS.

MANHOLE DIA.	MAIN SIZE
4 FT	<18in.
5 FT	≥18in. <30in.
6 FT	≥36in.

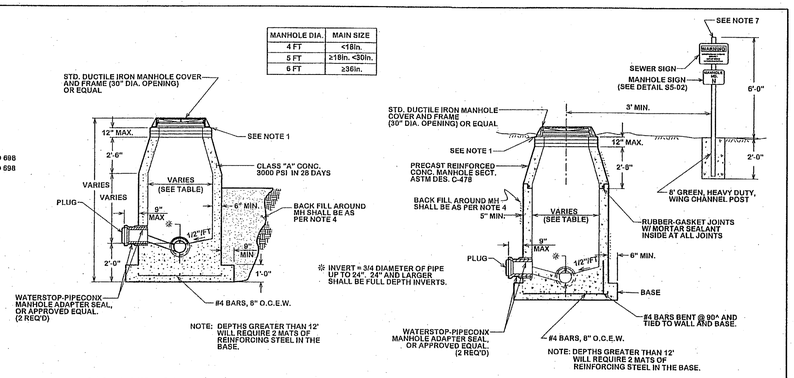

CAST IN PLACE MANHOLE *PRE-CAST MANHOLE*

STANDARD MANHOLE

S1-00

NOTES:

1. *FOR BEDDING AND TRENCHING WITHIN ALL EXISTING PAVED AREAS, SEE DETAILS FOR OPEN CUT STREETS. (Details ST4-02, ST4-01, ST4-02). THIS NOTE DOES NOT APPLY TO STREETS BEING RECONSTRUCTED.*
2. ALL BEDDING & INSTALLATION OF PVC PIPE SHALL BE IN ACCORDANCE TO ANSI/AWWA STANDARDS FOR PVC PIPE.
3. ALL BEDDING & INSTALLATION OF DUCTILE IRON PIPE SHALL BE IN ACCORDANCE TO ANSI/AWWA C150/A21.50.
4. COMPACTION SHALL BE ATTAINED BY MECHANICAL TAMPING.
5. ALL TRENCHES SHALL BE BACK FILLED AND TEMPORARY PAVING OR PLANKING PLACED AT THE END OF EACH WORKING DAY.

Ⓐ SELECT NATIVE MATERIAL
MATERIAL EXCAVATED FROM THE DITCH, (WHICH IS FREE OF ROCKS, LUMPS, CLODS, OR DEBRIS LARGER THAN TWO (2) INCHES IN THE LARGEST DIMENSION), COMPACTED TO A MINIMUM OF 90% OF MAXIMUM DENSITY AS DETERMINED BY ASTM D698 (STANDARD) AT A MOISTURE CONTENT WITHIN OPTIMUM TO +4% OF OPTIMUM UNDER NON-STRUCTURAL AREAS (ie...YARDS, PASTURES, EASEMENTS) AND TO A MINIMUM OF 98% OF MAXIMUM DENSITY AS DETERMINED BY ASTM D698 (STANDARD) AT A MOISTURE CONTENT WITHIN OPTIMUM TO +4% OF OPTIMUM UNDER NEW STREET AREAS AND STREETS TO BE RECONSTRUCTED.

Ⓑ GRANULAR MATERIAL
MATERIAL SHALL BE BANK RUN RIVER SAND WHICH IS FREE OF DETRIMENTAL QUANTITIES OF CLAY, DEBRIS, OR ORGANIC MATERIAL AND WHICH, WHEN TESTED BY STANDARD LABORATORY METHODS, MEET THE FOLLOWING REQUIREMENTS:

MAXIMUM LIQUID LIMIT	45
MAXIMUM PLASTICITY INDEX	15
MAXIMUM PERCENT PASSING NO. 200 SIEVE	35
MINIMUM PERCENT PASSING 3/4" SIEVE	100

THE MATERIAL SHALL BE FREE FLOWING AND WHEN WET, SHALL NOT ADHERE TO FORM A BALL WHEN PRESSED IN THE HAND.

Ⓒ CEMENT STABILIZED SAND

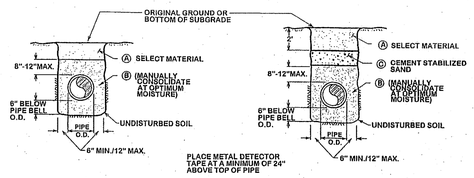

NON-STRUCTURAL AREAS *AREAS TO BE PAVED OR STREETS TO BE RECONSTRUCTED*

BEDDING AND TRENCH FOR DI PIPE & PVC PIPE

S1-01

NOTE: MANHOLE BASE SHALL BE PLACED ON FIRM SUBGRADE. ADDITION OF CEMENT STABILIZED SAND OR GRAVEL MAY BE REQUIRED TO STABILIZE FOUNDATION.

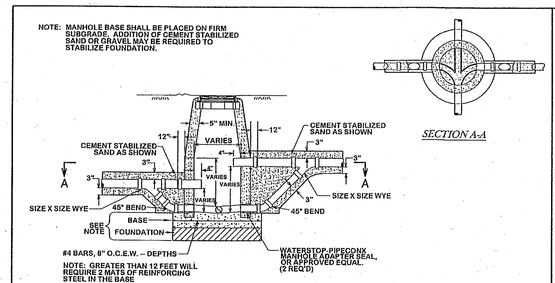

CITY OF COLLEGE STATION OUTSIDE DROP MANHOLE

ONLY ALLOWED FOR MAIN LINE CONNECTIONS 18" AND LARGER

S2-00

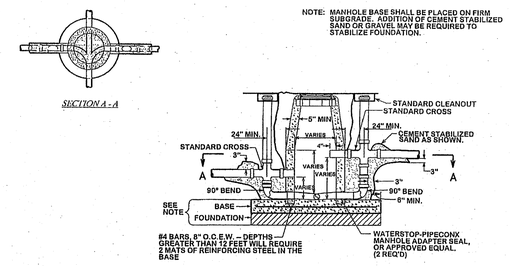

CITY OF BRAYN OUTSIDE DROP MANHOLE

ONLY WHEN APPROVED BY CITY ENGINEER

S2-01

NOTE:

MANHOLE BASE SHALL BE PLACED ON FIRM SUBGRADE. ADDITION OF CEMENT STABILIZED SAND OR GRAVEL MAY BE REQUIRED TO STABILIZE FOUNDATION.

IN EXISTING MANHOLE, PLACE PVC ELBOW ON BENCH, GROUT NEW BENCH TO SPRINGLINE AND TROWEL SMOOTH. FORM SMOOTH CHANNEL TO INVERT.

ALL NEW CONNECTION AT EXISTING MANHOLES SHALL BE BY CORING ONLY

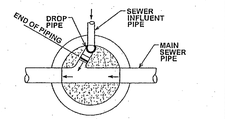

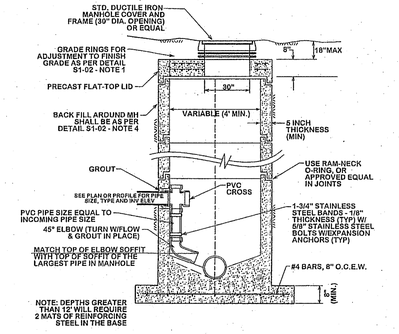

STANDARD DROP MANHOLE

CITY OF BRYAN - DROP MANHOLE TO BE USED ON LINES UP TO 12" IN SIZE

CITY OF COLLEGE STATION - DROP MANHOLE TO BE USED ON LINES UP TO 4" IN SIZE

S2-02

NOTES:

1. FLOW SHALL BE MAINTAINED DURING CONSTRUCTION.
2. THIS DETAIL TO BE USED WHEN A 6" OR LARGER LATERAL NECESSITATES CONSTRUCTION OF A NEW MANHOLE.
3. FOR ADDITIONAL STANDARDS NOT SHOWN, SEE "STANDARD MANHOLE" DETAIL S1-02.
4. CONTRACTOR SHALL BE RESPONSIBLE FOR SUPPORT OF EXISTING SEWER DURING INSTALLATION OF MANHOLE.
5. DOGHOUSE OPENING MAY ONLY BE USED WHEN PLACING A NEW MANHOLE OVER AN EXISTING LINE; OTHERWISE, THE OPENING MUST BE CAST. SIZE, LOCATION, AND ANGLE OF ENTRY SHALL BE AS REQUIRED BY THE PLANS.
6. EXCAVATE TRENCH TO MIN. 13" BELOW BOTTOM OF EXISTING PIPE, COMPACT SUBGRADE. PLACE AND COMPACT 4" OF GRANULAR BEDDING. MONOLITHIC POUR OF MIN. 7" DEPTH, 6 SACK TOPPING MIX TO BE PLACED INSIDE, UNDER, AND OUTSIDE MANHOLE BARREL FROM SURFACE OF BEDDING, AROUND CONCRETE BLOCK RISERS, TO A POINT APPROXIMATELY AT THE SPRING LINE OF THE EXIST. PIPE.
7. DURING THE SAME POUR, THE FINISH MANHOLE SHELF SHALL BE FORMED AND FINISHED AROUND THE BARREL AND EXISTING PIPE AS SHOWN.
8. AFTER CONCRETE SHELF HAS CURED, THE EXISTING PIPE SHALL BE SAW-CUT ON BOTH SIDES TO THE FINISHED SHELF GRADE AND REMOVED. THE EXISTING PIPE SHALL FORM THE TROUGH OF THE MANHOLE AS SHOWN. FILE CUT PIPE TO GIVE SMOOTH EDGES.

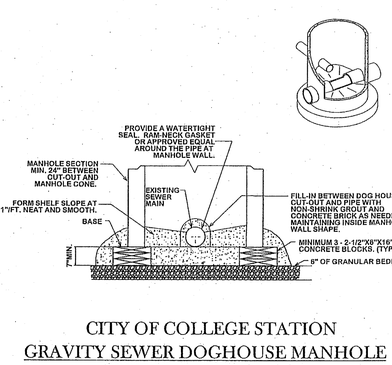

CITY OF COLLEGE STATION GRAVITY SEWER DOGHOUSE MANHOLE

S3-00

NOTES:

1. 1" DIA. "STARTER" HOLES SHALL BE DRILLED THROUGH WALL OF EXISTING MANHOLE SPACED 3" APART CENTER TO CENTER, AFTER "STARTER" HOLES HAVE BEEN INSTALLED AND APPROVED BY A CITY INSPECTOR, THE CONTRACTOR SHALL BEGIN REMOVING THE CONCRETE INSIDE THE PERIPHERAL "STARTER" HOLES. CONCRETE SHALL BE REMOVED WITH PNEUMATIC HAND TOOLS.
2. THE NUMBER OF REBAR DOWELS SHALL VARY WITH SIZE OF OPENING. REBAR SHALL NOT BE SPACED MORE THAN 12" CC.
3. WATERSTOP SHALL BE INSTALLED IN STRICT ACCORDANCE WITH MANUFACTURERS REQUIREMENTS.
4. CONCRETE SHALL BE 3,000 P.S.I.

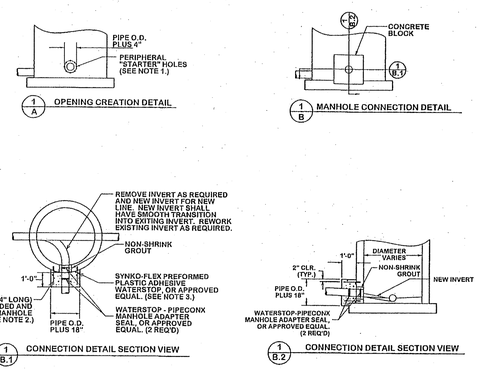

STANDARD MANHOLE TIE-IN

S3-01

NOTES:

1. EACH PIER SHALL BE COMPLETED IN A SINGLE CONTINUOUS POUR.
2. CHAMFER EDGES 3/4".
3. CONTRACTOR SHALL CONSTRUCT CONCRETE PIER TO A MINIMUM DEPTH OF 6' OR TO A DEPTH WHERE A GOOD BEARING SOIL IS ENCOUNTERED.
4. ALL SHAFTS SHALL BE BORED VERTICALLY PLUMB WITHIN 2" TOLERANCE.
5. ALL INFORMATION SHOWN IS CITY MINIMUM. ALL PIERS SHALL BE DESIGNED BY A PROFESSIONAL ENGINEER.

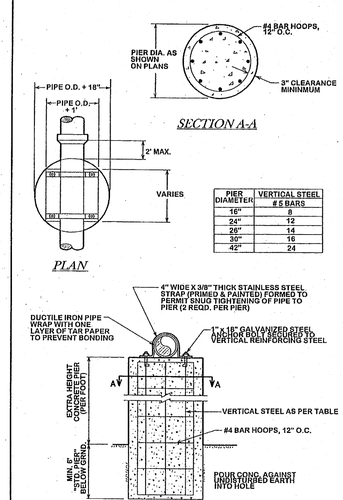

PIER DIAMETER	VERTICAL STEEL # 5 BARS
16"	8
24"	12
26"	14
30"	16
42"	24

TYPICAL CONCRETE DRILLED PIER FOR AERIAL SEWER

S4-00

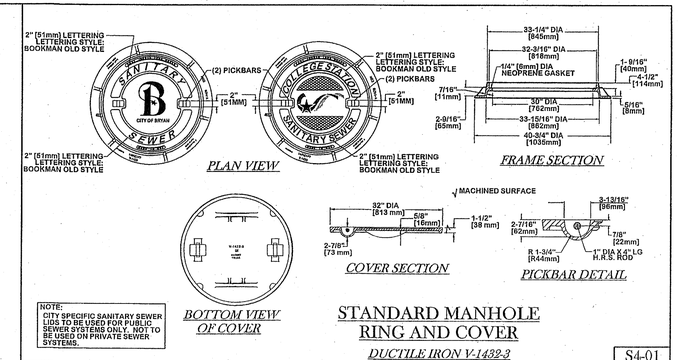

STANDARD MANHOLE RING AND COVER

DUCTILE IRON V-1432-3

S4-01

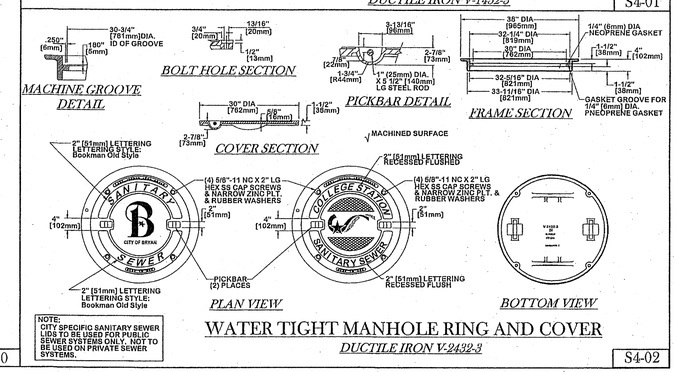

WATER TIGHT MANHOLE RING AND COVER

DUCTILE IRON V-2432-3

S4-02

REVISIONS:

BRYAN - COLLEGE STATION STANDARD SEWER DETAILS

CITY OF COLLEGE STATION

CITY OF BRYAN
The Good Life, Texas Style.

DRAWN BY: C.L.M.
DATE: 08-01-12
SCALE: N T S
APPROVED: W. P. K.

FIGURE: S1

SHEET 1 OF 2

GENERAL NOTES:

ALL AREAS WHERE EXISTING VEGETATION AND GRASS COVER HAVE BEEN BARED BY CONSTRUCTION SHALL BE ADEQUATELY BLOCK SODDED OR HYDROMULCHED AND WATERED UNTIL GROWTH IS ESTABLISDHED. IN DEVELOPED AREAS WHERE GRASS IS PRESENT, BLOCK SOD WILL BE REQUIRED. BARED AREAS SHALL BE SEEDED OR SODDED WITHIN 14 CALENDAR DAYS OF LAST DISTURBANCE.

APPROVED EROSION CONTROL MEASURES MUST BE INSTALLED DURING THE ENTIRE TIME THAT EARTH HAS BEEN BARED BY CONSTRUCTION AND SHALL STAY IN PLACE UNTIL ACCEPTABLE VEGETATIVE GROWTH IS ESTABLISHED AFTER CONSTRUCTION IS COMPLETE AND THEN REMOVED BY CONTRACTOR.

ALL EROSION CONTROL MEASURES SHOULD BE CLEANED OF SILT AFTER EVERY RAIN.

ESTABLISHMENT OF VEGETATION MAY BE A WARRANTY ITEM.

STRUCTURAL BACKFILL AREA INCLUDES ALL PAVED AREAS (SIDEWALKS, STREETS, ALLEYS, DRIVEWAYS,AND PARKING AREAS) AND SHALL EXTEND 5' BEYOND THE CURB LINE. STRUCTURAL BACKFILL SHALL BE CEMENT STABILIZED (OPTION NO. 2 IN S1-01) OR EXCAVATED SOIL COMPACTED TO 98% MAXIMUM DRY DENSITY AS PER ASTM D698 WITHIN OPTIMUM TO +4% WET OF OPTIMUM (OPTION NO. 1 IN S1-01)

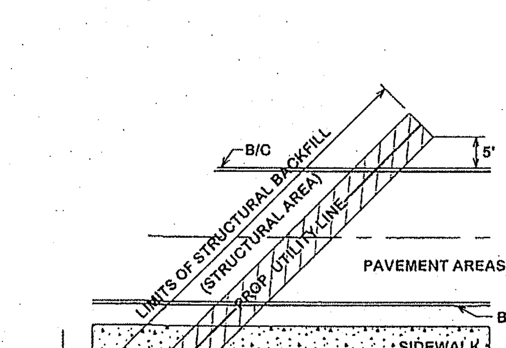

STRUCTURAL BACKFILL AREA

S5-00

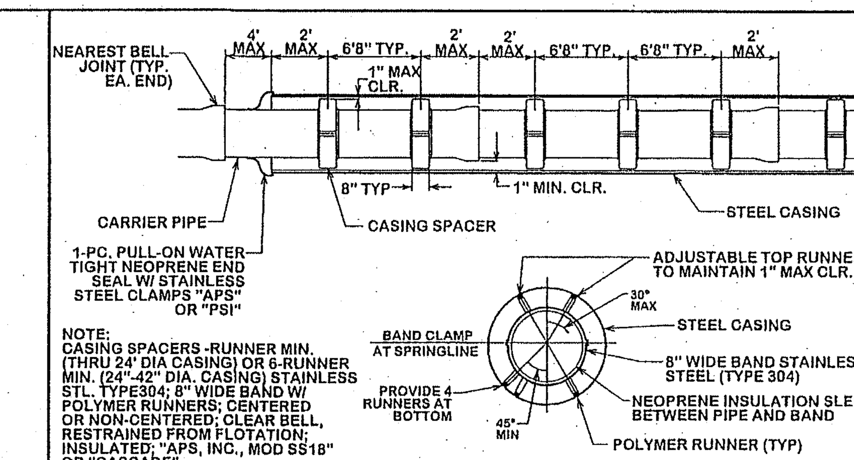

NOTE: CASING SPACERS -RUNNER MIN. (THRU 24' DIA CASING) OR 6-RUNNER MIN. (24"-42" DIA. CASING) STAINLESS STL. TYPE304; 8" WIDE BAND W/ POLYMER RUNNERS; CENTERED OR NON-CENTERED; CLEAR BELL, RESTRAINED FROM FLOTATION; INSULATED; "APS, INC., MOD SS18" OR "CASCADE"

CASING DETAIL

S5-03

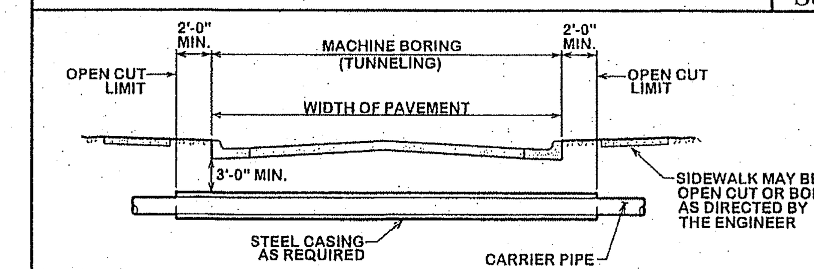

NOTE:

1. FOR MORE INFORMATION ON WATER AND SEWER LINE CROSSING SEE CITY STANDARD SPECIFICATION FOR WATER AND SEWER LINE CONSTRUCTION.
2. STEEL CASING SHALL BE AS SPECIFIED IN THE TECHNICAL SPECIFICATIONS.
3. DRY BORING PREFERRED, WET BORING ALLOWED ONLY WHEN APPROVED BY THE CITY ENGINEER.

TYPICAL URBAN CITY STREET CROSSING

S5-04

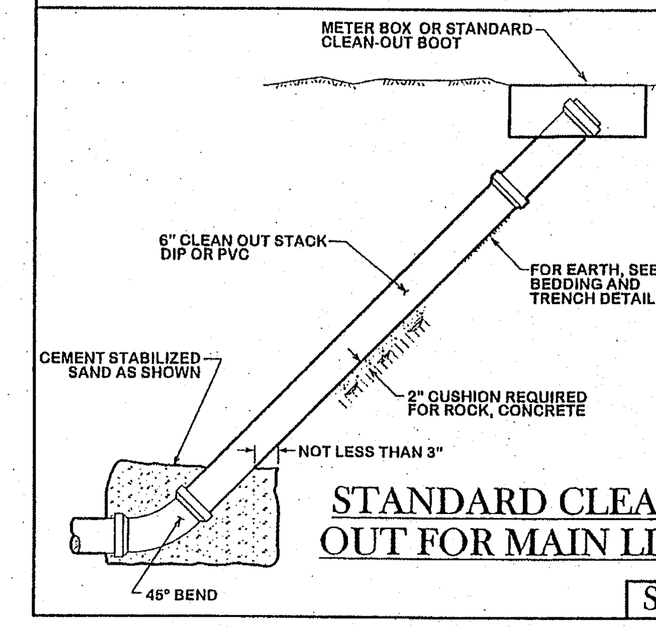

STANDARD CLEAN OUT FOR MAIN LINE

S5-01

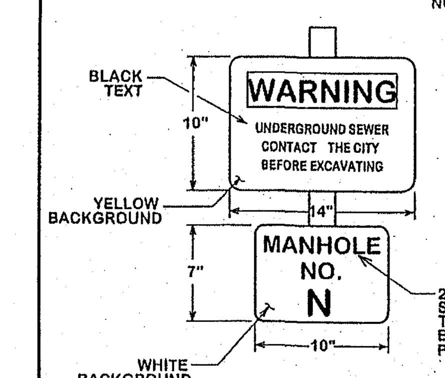

NOTES:

1. FURNISH AS SHOWN ON PLANS AND/OR AT EACH MANHOLE WHERE SEWER LINE CROSSES OPEN FIELDS
2. SIGNS TO BE CONSTRUCTED FROM 20 GA. STEEL BAKED ON ENAMEL FINISH. FURNISH ONE SIGN AND ONE POST FOR EACH OPEN FIELD AND AT OTHER LOCATIONS AS SHOWN ON THE PLANS. FURNISH SAME NUMBER OF REPLACEMENT SIGNS AS FOR EACH INSTALLED (OMITTING MANHOLE NUMBER ON MANHOLE SIGN) (NOT A SEPARATE PAY ITEM)

SEWER WARNING AND MANHOLE IDENTIFICATION SIGN

S5-02

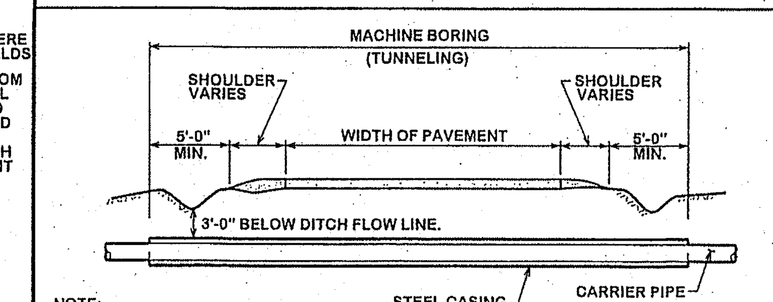

NOTE:

1. FOR MORE INFORMATION ON WATER AND SEWER LINE CROSSING SEE CITY STANDARD SPECIFICATION FOR WATER AND SEWER LINE CONSTRUCTION.
2. STEEL CASING SHALL BE AS SPECIFIED IN THE TECHNICAL SPECIFICATIONS.
3. DRY BORING IS REQUIRED.

TYPICAL RURAL STREET CROSSING

S5-05

NOTE:

1. ALL MATERIAL SHALL BE ASTM D3034 SDR26 W/ GASKETS
2. ALL SERVICE CONNECTIONS & EXTENSIONS ARE TO BE INSTALLED WITH THE MAIN LINE CONSTRUCTION.
3. A CLEAN OUT IS REQUIRED AND WILL BE INSTALLED BY THE CONTRACTOR AT THE ROW FOR EACH SERVICE. CLEANOUT SHALL INCLUDE A BRASS PLUG.
4. CLEANOUTS SHALL BE EXTENDED 4 FEET ABOVE NATURAL GROUND. CLEANOUT CAP FITTING SHALL BE PLACED ON TOP.
5. LOT CORNERS SHALL BE MARKED WITH A LATH UNDER THE SUPERVISION OF A RPLS UPON COMPLETION OF CONSTRUCTION

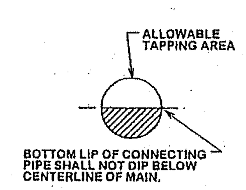

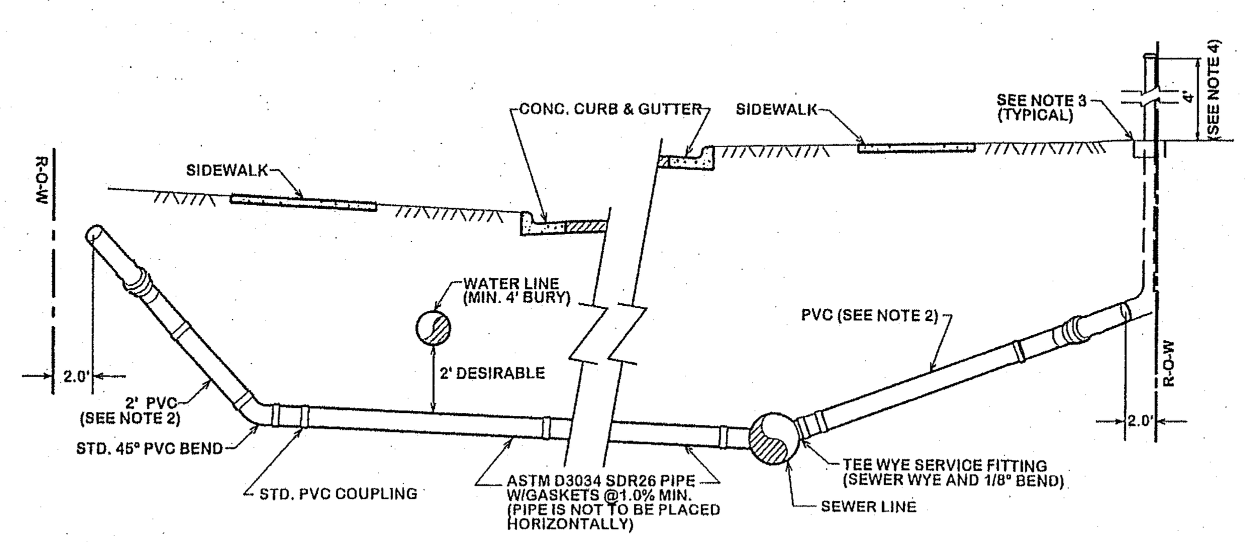

PROFILE

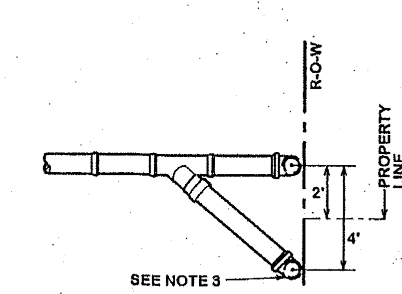

PLAN

CITY OF BRYAN
SEWER SERVICE LINE CROSSING

S6-00

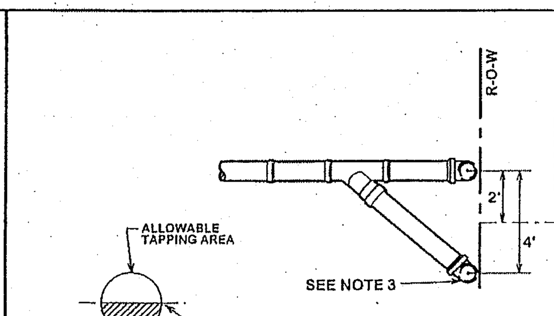

PLAN

NOTE:

1. ALL MATERIAL SHALL BE ASTM D3034 SDR26 W/ GASKETS
2. ALL SERVICE CONNECTIONS & EXTENSIONS ARE TO BE INSTALLED WITH THE MAIN LINE CONSTRUCTION.
3. A CLEAN OUT IS REQUIRED AND WILL BE INSTALLED BY THE CONTRACTOR AT THE ROW FOR EACH SERVICE. CLEANOUT SHALL INCLUDE A BRASS PLUG.
4. CLEANOUTS SHALL BE EXTENDED 4 FEET ABOVE NATURAL GROUND. CLEANOUT CAP FITTING SHALL BE PLACED ON TOP.

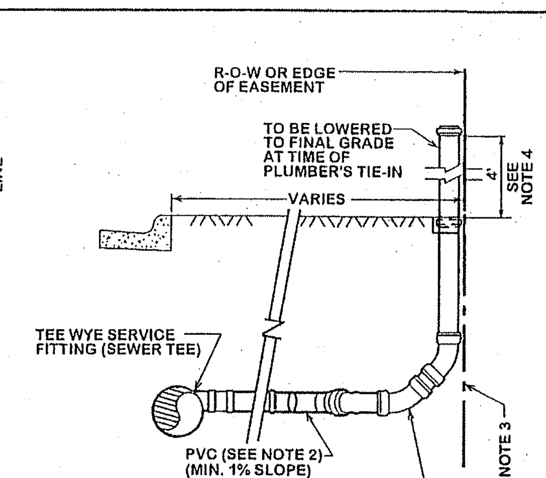

STANDARD CONNECTION PROFILE

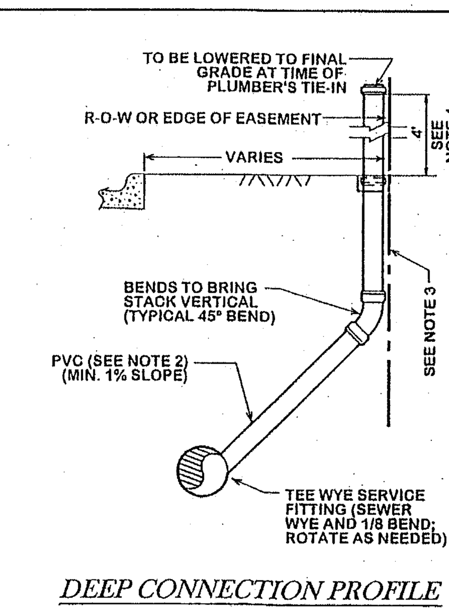

DEEP CONNECTION PROFILE

CITY OF BRYAN
SANITARY SEWER SERVICE CONNECTION

S6-01

NOTE:

1. WHERE DOUBLE WYE SERVICE ELEVATION IS LESS THAN 2'-7" BELOW PROPOSED BACK OFCURB, MIN. SLAB ELEV. MUST BE SET TO ALLOW SANITARY SEWER SERVICE.
2. MARK EACH SERVICE END WITH METAL "T" POST PAINTED GREEN.
3. ALL MATERIAL SHALL BE ASTM D3034 SDR26 W/ GASKETS
4. ALL SERVICE CONNECTIONS & EXTENSIONS ARE TO BE INSTALLED WITH THE MAIN LINE CONSTRUCTION.
5. A CLEAN OUT IS REQUIRED AND WILL BE INSTALLED BY THE PLUMBER AT THE ROW FOR EACH SERVICE.
6. LOT CORNERS SHALL BE MARKED WITH A LATH UNDER THE SUPERVISION OF A RPLS UPON COMPLETION OF CONSTRUCTION
7. WHEN SERVICE CONNECTION IS DEEP, CONTRACTOR MUST PLACE A VERTICAL STACK THAT SHALL BE BROUGHT WITHIN 3-1/2 FEET BELOW NATURAL GROUND.

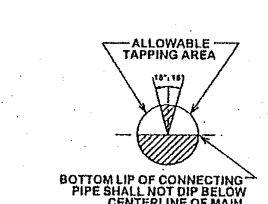

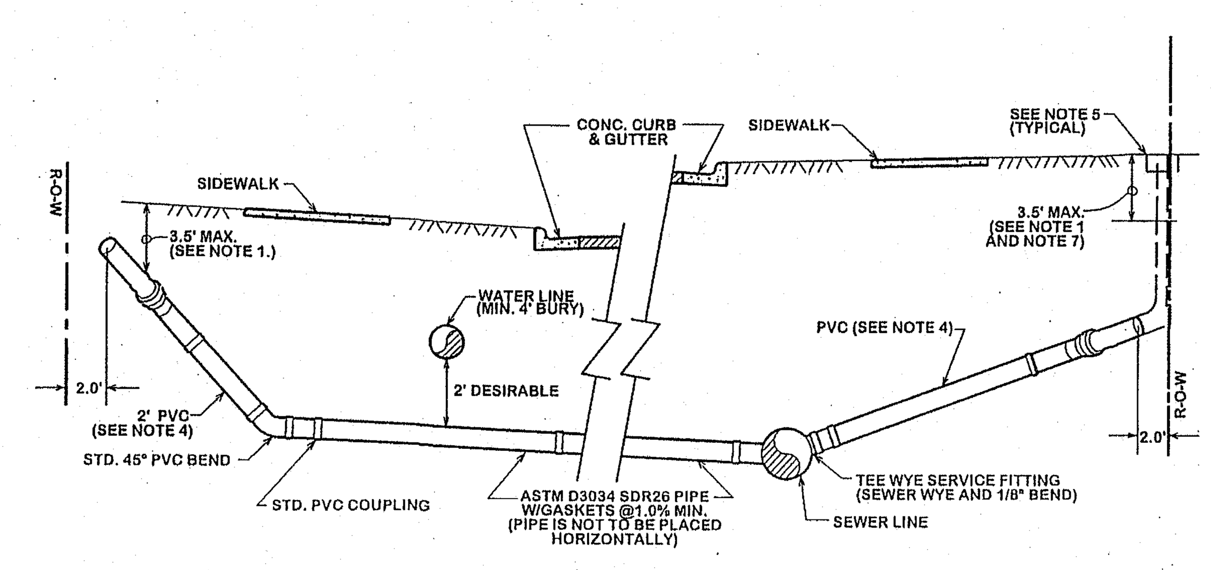

PROFILE

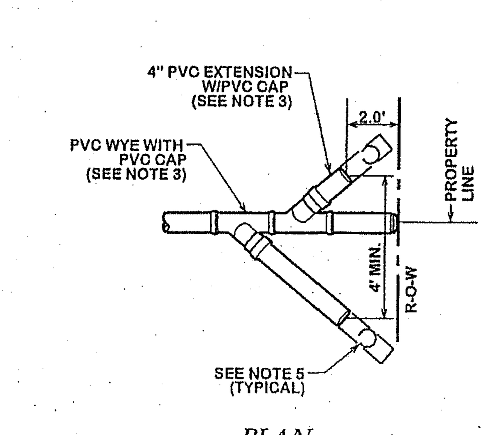

PLAN

CITY OF COLLEGE STATION
SEWER SERVICE LINE CROSSING

S7-00

NOTE:

1. WHERE DOUBLE WYE SERVICE ELEVATION IS LESS THAN 2'-7" BELOW PROPOSED BACK OFCURB, MIN. SLAB ELEV. MUST BE SET TO ALLOW SANITARY SEWER SERVICE.
2. MARK EACH SERVICE END WITH METAL "T" POST PAINTED GREEN.
3. ALL MATERIAL SHALL BE ASTM D3034 SDR26 W/ GASKETS
4. ALL SERVICE CONNECTIONS & EXTENSIONS ARE TO BE INSTALLED WITH THE MAIN LINE CONSTRUCTION.
5. A CLEAN OUT IS REQUIRED AND WILL BE INSTALLED BY THE PLUMBER AT THE ROW FOR EACH SERVICE.
6. WHEN SERVICE CONNECTION IS DEEP, CONTRACTOR MUST PLACE A VERTICAL STACK THAT SHALL BE BROUGHT WITHIN 3-1/2 FEET BELOW NATURAL GROUND.

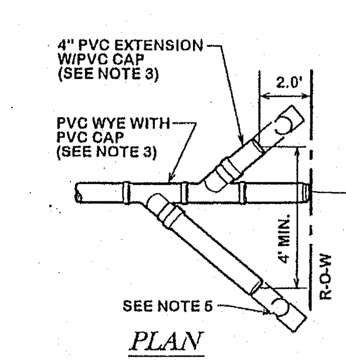

PLAN

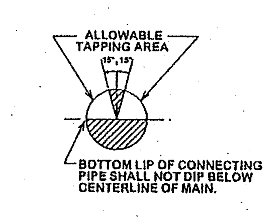

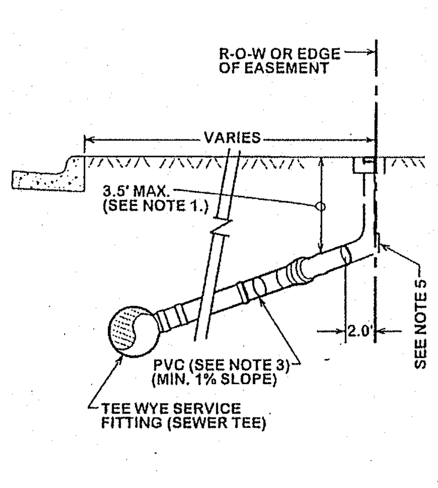

STANDARD CONNECTION PROFILE

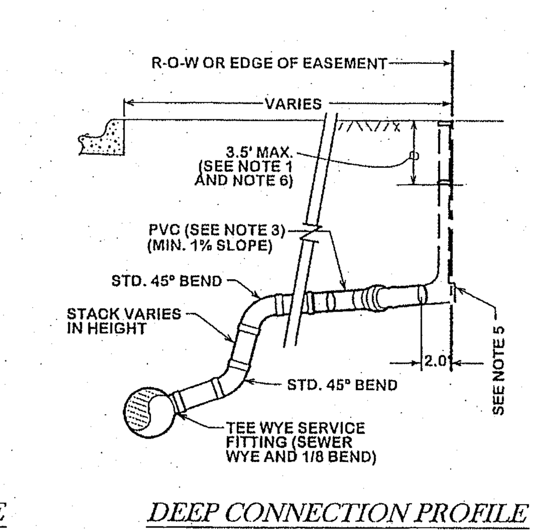

DEEP CONNECTION PROFILE

CITY OF COLLEGE STATION
SANITARY SEWER SERVICE CONNECTION

S7-01

REVISIONS:
S6-00 & S6-01 revised 10/26/2012.

BRYAN - COLLEGE STATION
STANDARD SEWER DETAILS

CITY OF COLLEGE STATION

CITY OF BRYAN
The Good Life, Texas Style.™

DRAWN BY:	C.L.M.
DATE:	08-01-12
SCALE:	N T S
APPROVED:	W. P. K.

FIGURE:
S2

SHEET 2 OF 2

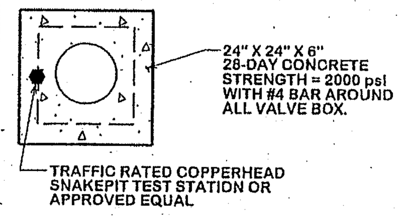

VIEW A - A

NOTE:
1. VALVE EXTENSION TO BE USED ONLY WHEN TOP OF GATE VALVE IS DEEPER THAN 5 FEET FROM FINISHED GRADE.
2. ALL VALVE OPERATING NUT EXTENSIONS ARE TO BE MADE OF STEEL, SIZED AS NOTED, AND PAINTED WITH TWO (2) COATS OF METAL PAINT.
3. EXTENSIONS SHALL BE A MINIMUM OF ONE (1) FOOT LONG.
4. VALVE BOX LIDS LOCATED ON VALVES TO ISOLATE FIRE SUPPRESSION LINES FROM PUBLIC WATER LINES SHALL BE AMPro USA, LL562 LOCKABLE LID.

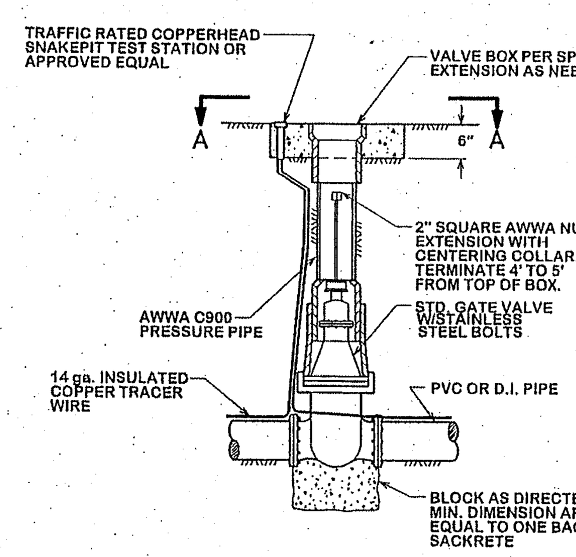

GATE VALVE & BOX

W1-00

GENERAL NOTES:
1. FINELY DIVIDED EARTH FREE OF ROCK, LUMPS AND CLODS EXCEEDING 6" SHALL BE PLACED BY HAND, AND COMPACTED AROUND THE CAST IRON PIPE TO A DEPTH OF 12" OVER THE TOP OF THE PIPE BEFORE BACKFILL IS BEGUN BY ANY MECHANICAL EQUIPMENT.
2. ALL CONCRETE BLOCKING SHALL BE - 28 DAY CONCRETE STRENGTH = 2000psi.
3. ALL THRUST BLOCKING SHALL PROVIDE A MINIMUM OF 2 SQUARE FEET OF BEARING AREA OF CONCRETE ON UNDISTURBED SOIL, OR AS DIRECTED BY THE ENGINEER.
4. WATER MAINS WILL NOT BE FULLY PRESSURIZED UNTIL CONCRETE HAS REACHED 7 DAY STRENGTH.
5. ALL PIPE WILL BE LAID SO AS THE ENTIRE BARRELL WILL HAVE FULL BEARING ON THE FINE GRADED TRENCH BOTTOM. BELL HOLES SHALL BE CUT FOR EACH BELL AND FIRE HYDRANT.
6. ALL FITTING SHALL BE MECHANICL JOINTS UNLESS OTHERWISE DIRECTED.
7. HYDRANTS SHALL BE LOCATED NO CLOSER THAN 3 FEET MEASURED FROM THE BACK OF CURB TO THE FACE OF THE STEAMER ON THE FIRE HYDRANT.
8. IF MAIN VALVE IS WITHIN 50 FEET OF FIRE HYDRANT THEN ASSEMBLY VALVE MAY BE OMITTED ON A DEAD END HYDRANT LEAD WITH NO ADDITIONAL CONNECTIONS.
9. HEIGHT OF FIRE HYDRANT MEASURED FROM THE STEAMER NOZZLE SHALL BE 18 TO 24 INCHES ABOVE NEAREST FINAL GRADE.

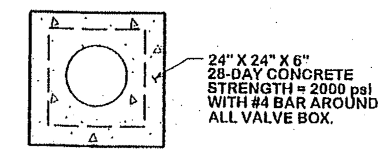

VIEW A - A

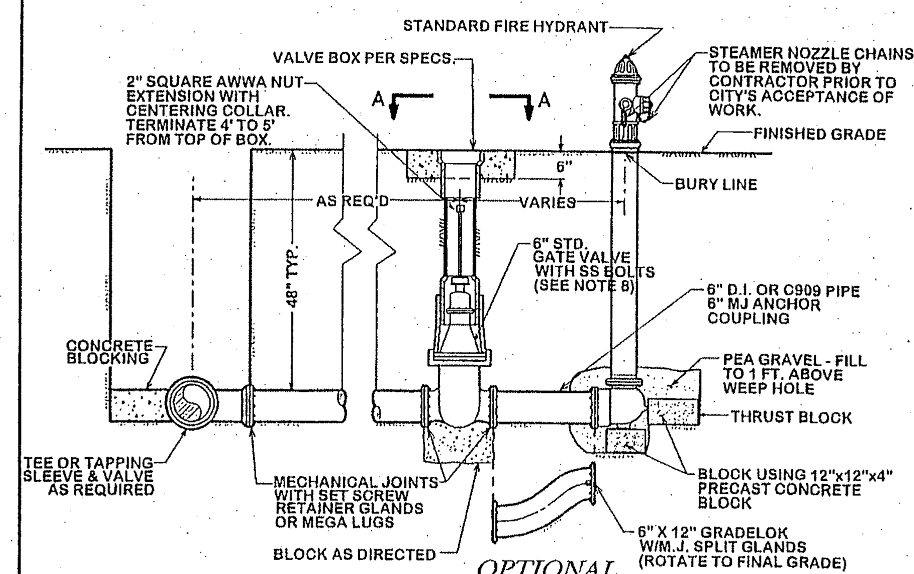

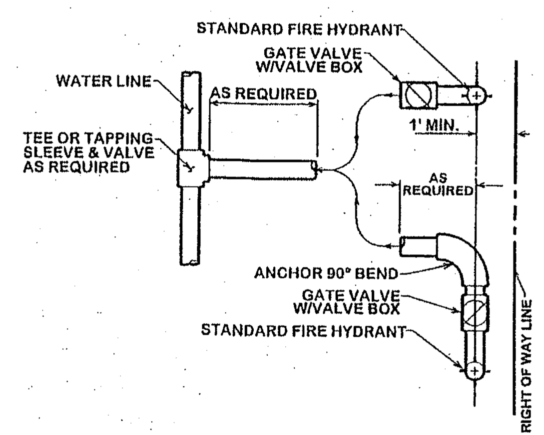

FIRE HYDRANT LOCATION
REALIGN AS NEEDED

STANDARD FIRE HYDRANT ASSEMBLY

W1-02

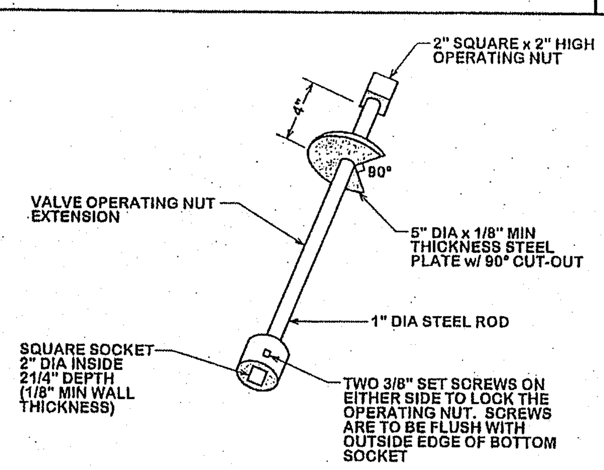

GATE VALVE EXTENSION

W1-01

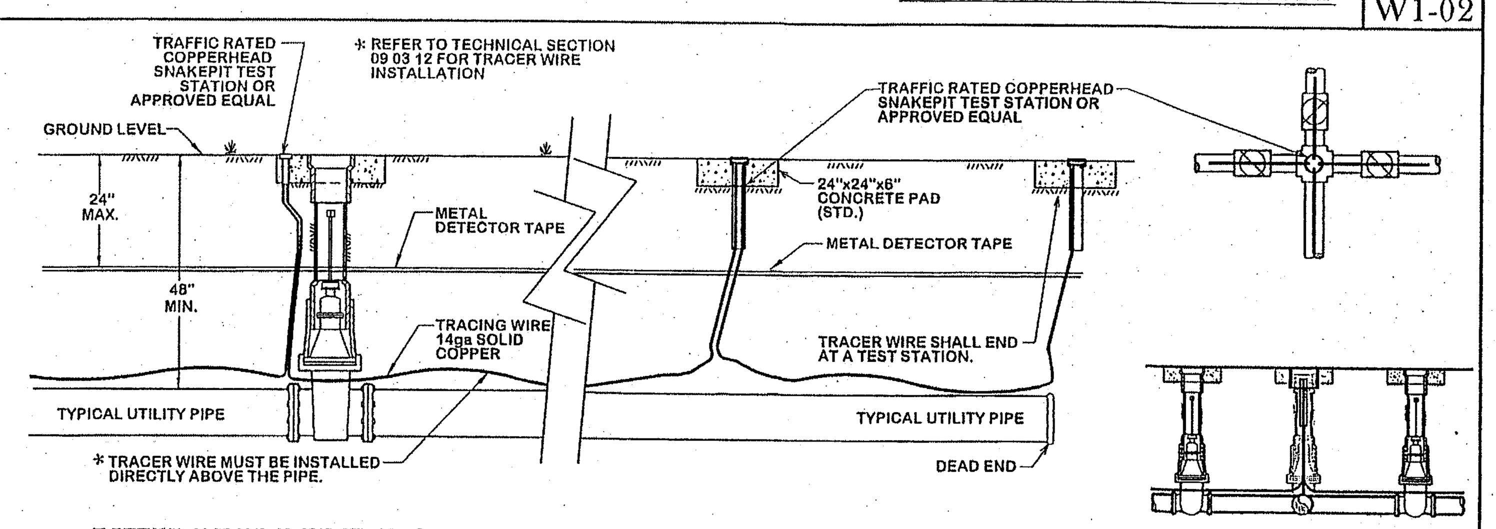

UTILITY PIPE LOCATION MATERIALS

W1-03

THRUST BLOCK NOTES:
1. ALL CALCULATIONS ARE BASED ON INTERNAL PRESSURE OF 200 psi FOR 24" AND SMALLER INNER DIAMETER PIPE.
2. ALL BEARING SURFACES OF THRUST BLOCKS SHALL BE PLACED AGAINST UNDISTURBED EARTH OR ROCK.
3. CONCRETE FOR BLOCKING SHALL BE 2000 psi.
4. DIMENSIONS MAY BE VARIED AS REQUIRED BY FIELD WHERE AND AS DIRECTED BY THE ENGINEER. THE VOLUME OF CONCRETE BLOCKING SHALL NOT BE LESS THAN SHOWN HERE.
5. WATER MAIN SHALL NOT BE PRESSURIZED UNTIL ALL CONCRETE BLOCKING HAS REACHED 1500 psi.

TEE SCHEDULE

ID (in)	THRUST (tons)	C (ft)	A (ft)	VOLUME (c.y.)
4,6,8	5.1	1.5	2.5	0.3
10,12	11.3	1.5	3.5	0.6

NOTE:
USE POLYETHYLENE WRAP OR EQUAL BETWEEN CONCRETE & PLUG TO PREVENT CONCRETE FROM STICKING TO PLUG.

HORIZONTAL THRUST BLOCK SCHEDULE

BEND	SIZE	A (ft)	B (ft)	C (ft)	E (ft)	G (ft)	VOLUME (c.y.)
90°	6,8"	5.0	1.5	1.5	0.9	2.7	0.4
	10,12"	6.5	2.5	1.5	1.2	4.0	1.0
45°	6,8"	2.0	2.0	1.5	0.9	1.5	0.2
	10,12"	3.5	2.5	1.5	1.2	2.2	0.5
22.5°	6,8"	1.5	1.5	1.5	0.9	0.8	0.1
	10,12"	2.0	2.5	1.5	1.2	1.1	0.3
11.25°	6,8"	1.0	1.5	1.5	0.9	0.4	0.1
	10,12"	1.5	1.5	1.5	1.2	0.6	0.1

THRUST BLOCK DETAILS

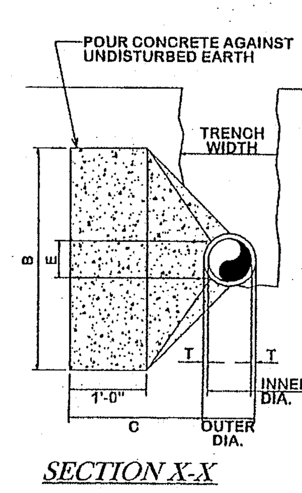

SECTION X-X

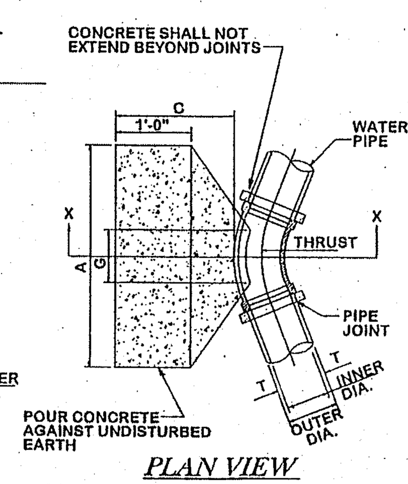

PLAN VIEW

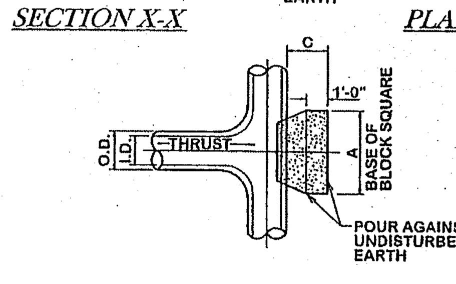

TEE THRUST BLOCK

TYPICAL HORIZONTAL THRUST BLOCK

W2-00

NOTES:
1. NO SPLICES IN COPPER TUBING WILL BE ALLOWED FOR SINGLE SERVICE OR BETWEEN THE SERVICE SADDLE AND THE WYE FOR DOUBLE SERVICE.
2. IT SHALL BE THE RESPONSIBILITY OF THE CONTRACTOR TO PRESSURE TEST LINE IMMEDIATELY AFTER THE STREET CROSSINGS HAVE BEEN INSTALLED.
3. MARK EACH SERVICE END WITH METAL "T" POST PAINTED BLUE.
4. MATERIAL USED SHALL BE AS SPECIFIED OR AN APPROVED EQUAL.
5. ALL CONNECTIONS TO BE COMPRESSION TYPE.
6. ALL SERVICE WYES & EXTENSIONS ARE TO BE INSTALLED WITH THE MAIN LINE CONSTRUCTION.
7. METERS AND VALVE BOXES SHALL BE PLACED BY THE CITY UPON PAYMENT OF FEE.
8. LOT CORNERS SHALL BE MARKED WITH A LATH UNDER THE SUPERVISION F A RPLS UPON COMPLETION OF CONSTRUCTION.

** SEE TECHNICAL SECTION 33 12 13 FOR MATERIAL REQUIREMENTS

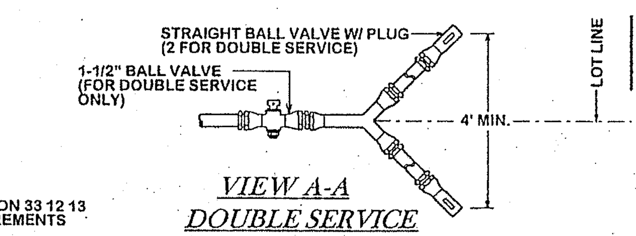

VIEW A-A
DOUBLE SERVICE

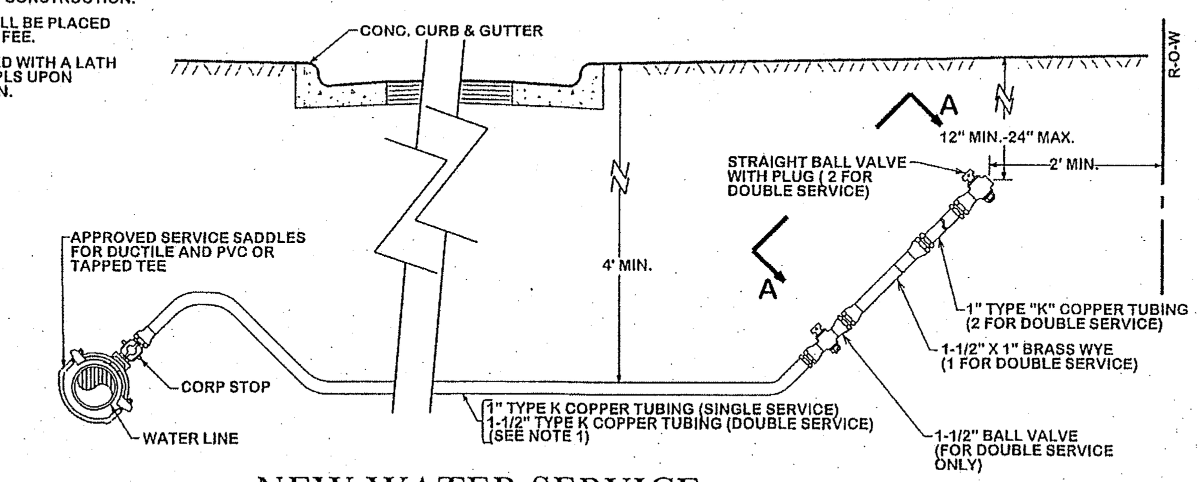

NEW WATER SERVICE

(SHORT AND LONG SIDE)

W2-01

STRUCTURAL BACKFILL AREA INCLUDES ALL PAVED AREAS (SIDEWALKS, STREETS, ALLEYS, DRIVEWAYS,AND PARKING AREAS) AND SHALL EXTEND 5' BEYOND THE CURB LINE. STRUCTURAL BACKFILL SHALL BE CEMENT STABILIZED (SEE DETAIL W4-02 - AREASTO BE PAVED) OR EXCAVATED SOIL COMPACTED TO 98% MAXIMUM DRY DENSITY AS PER ASTM D698 WITHIN OPTIMUM TO +4% WET OF OPTIMUM (SEE DETAIL W4-02 - NON-STRUCTURAL AREAS)

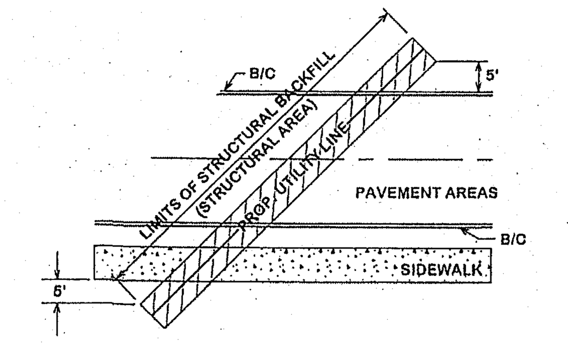

STRUCTURAL BACKFILL AREA

W2-02

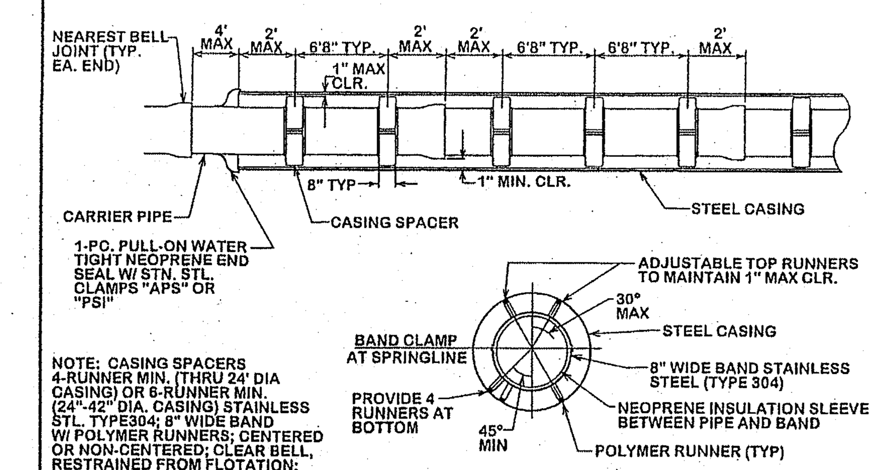

NOTE: CASING SPACERS 4-RUNNER MIN. (THRU 24' DIA CASING) OR 6-RUNNER MIN. (24"-42" DIA. CASING) STAINLESS STL. TYPE304; 8" WIDE BAND W/ POLYMER RUNNERS; CENTERED OR NON-CENTERED; CLEAR BELL, RESTRAINED FROM FLOTATION; INSULATED; "APS, INC., MOD SS18" OR "CASCADE"

CASING DETAIL

W2-03

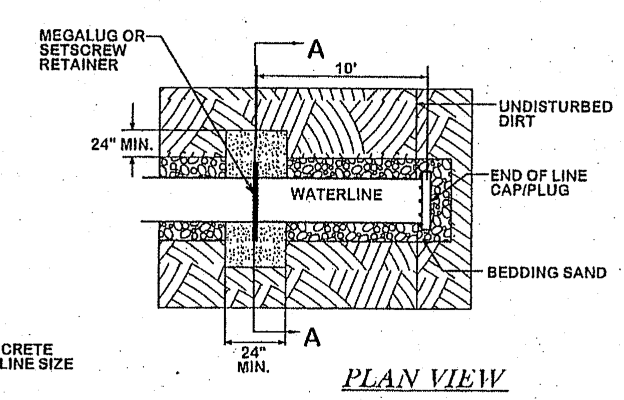

NOTE:
DIMENSION FOR CONCRETE VARIES WITH WATERLINE SIZE

PLAN VIEW

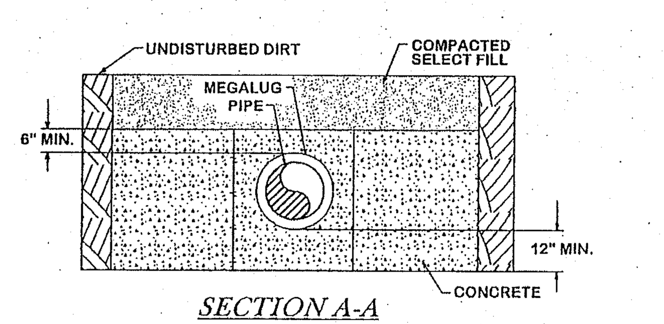

SECTION A-A

END OF LINE BLOCKING

W3-00

NOTES:
1. FURNISH AS SHOWN ON PLANS AND ON ALL VALVE SIGN POSTS.
2. SIGNS TO BE CONSTRUCTED FROM 20 GA. STEEL BAKED ON ENAMEL FINISH. FURNISH ONE WARNING AND ONE VALVE SIGN AND ONE POST FOR EACH VALVE INSTALLED AND AT OTHER LOCATIONS AS SHOWN ON PLANS. FURNISH SAME NUMBER OF REPLACEMENT SIGNS AS FOR EACH INSTALLED (OMITTING VALVE NUMBER ON VALVE SIGN) (NOT A SEPARATE PAY ITEM)

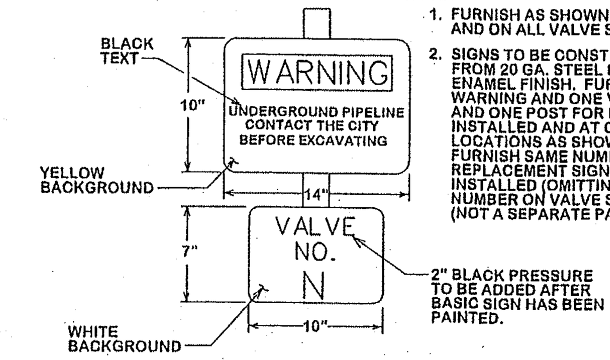

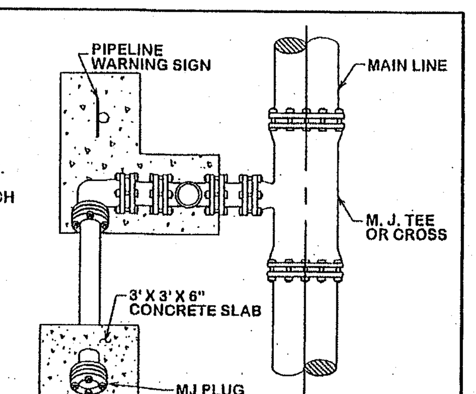

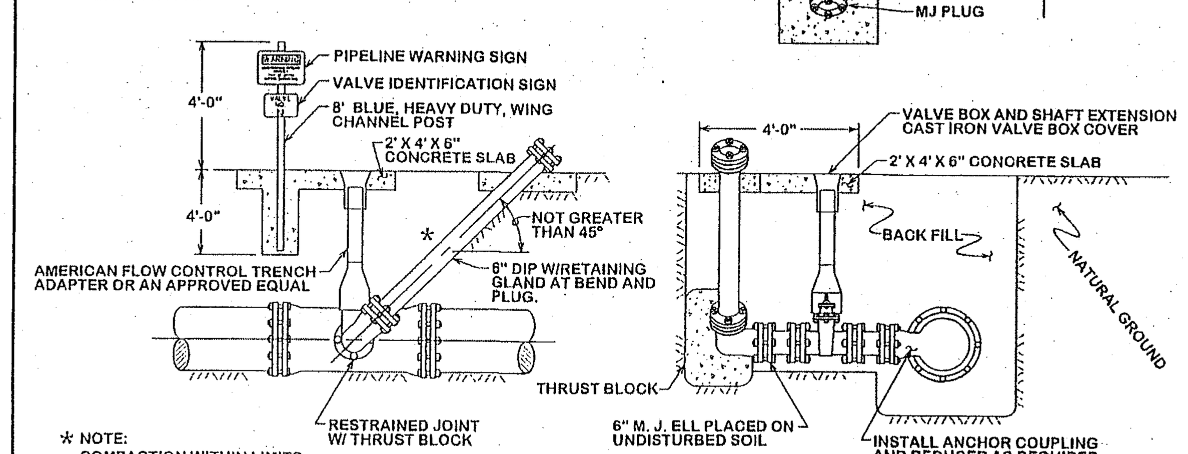

* NOTE:
COMPACTION WITHIN LIMITS OF ASSEMBLY SHALL BE 95% STANDARD DENSITY PER ASTM D698

IN-LINE BLOW OFF ASSEMBLY

W3-01

NOTE:
1. EMBED COPPER LINE IN TAMPED SAND FROM UNDISTURBED SOIL TO 6" ABOVE AND ON BOTH SIDES OF COPPER PIPE.
2. PAYMENT FOR BID ITEM OF "AIR RELEASE VALVE" SHALL INCLUDE ALL MATERIALS, AS SHOWN IN DETAIL, INCLUDING MAIN LINE TAPPING SADDLE.
3. PIPE SIZE SHALL BE 1" OR 2".
4. SIZE OF LINES AND VALVES MAY BE MODIFIED BY THE ENGINEER

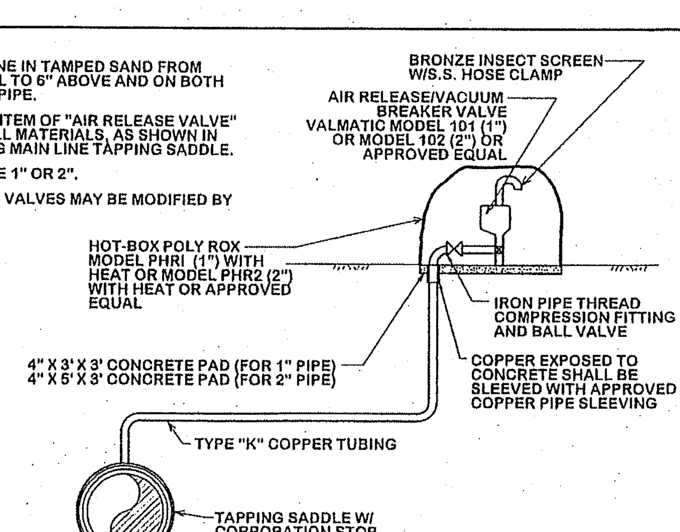

AIR RELEASE VALVE & VACUUM CHECK VALVE

W3-02

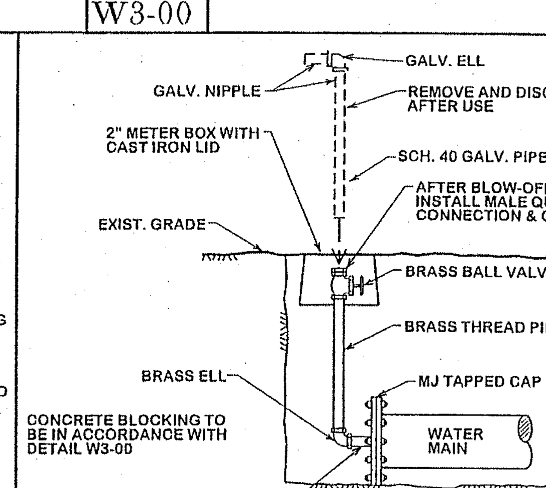

2" BLOW-OFF RISER

W3-03

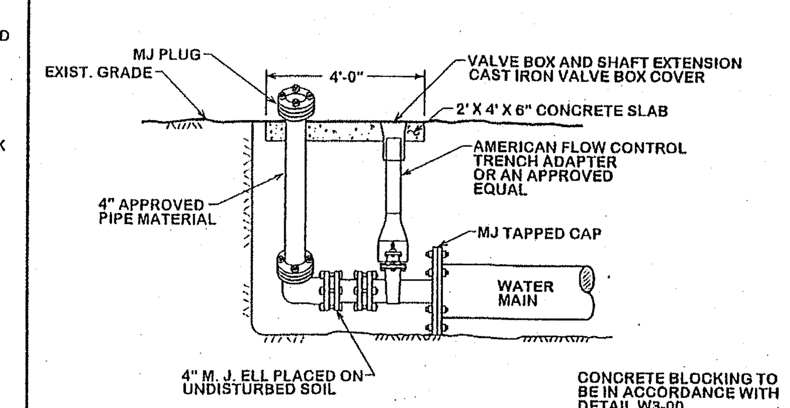

4" END OF LINE BLOW-OFF

W3-04

NOTE:
1. FOR MORE INFORMATION ON WATER AND SEWER LINE CROSSING SEE CITY STANDARD SPECIFICATION FOR WATER AND SEWER LINE CONSTRUCTION
2. STEEL CASING SHALL BE AS SPECIFIED IN THE TECHNICAL SPECIFICATIONS.
3. DRY BORING PREFERRED, WET BORING ALLOWED ONLY WHEN APPROVED BY THE CITY ENGINEER.
4. PIPE CROSSING A ROADWAY SHALL BE INSTALLED ABOVE THE MAIN IT TIES INTO WITH A BEND SUCH THAT THE CARRIER PIPE CAN BE PULLED ABOVE THE PARALLEL MAIN.

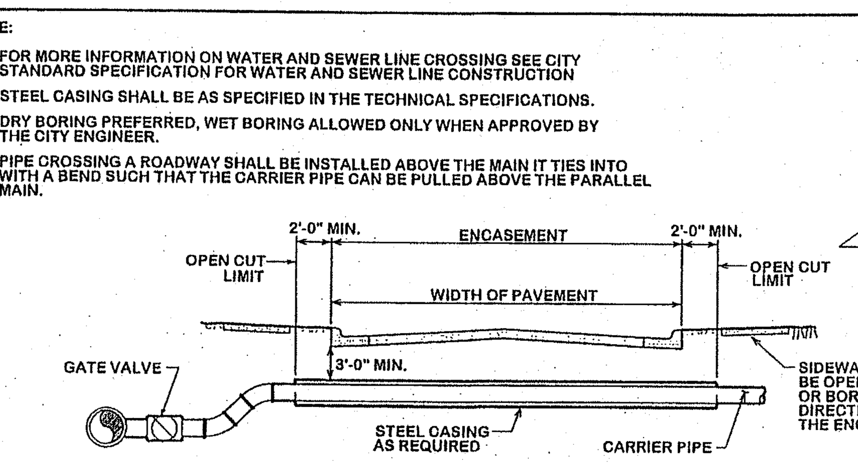

TYPICAL URBAN CITY STREET CROSSING

W4-00

NOTE:
1. FOR MORE INFORMATION ON WATER AND SEWER LINE CROSSING SEE CITY STANDARD SPECIFICATION FOR WATER AND SEWER LINE CONSTRUCTION
2. STEEL CASING SHALL BE AS SPECIFIED IN THE TECHNICAL SPECIFICATIONS.
3. DRY BORING IS REQUIRED.
4. PIPE CROSSING A ROADWAY SHALL BE INSTALLED ABOVE THE MAIN IT TIES INTO WITH A BEND SUCH THAT THE CARRIER PIPE CAN BE PULLED ABOVE THE PARALLEL MAIN.

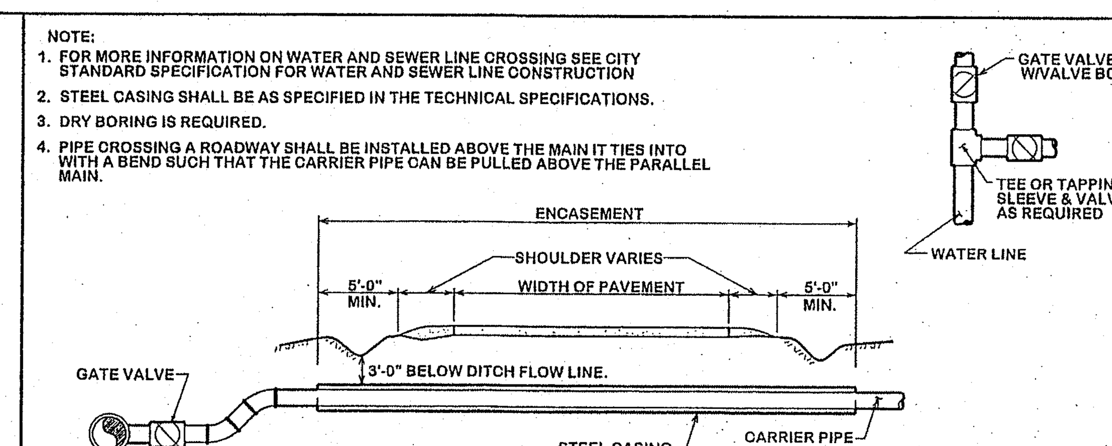

TYPICAL RURAL STREET CROSSING

W4-01

Ⓐ SELECT MATERIAL
MATERIAL EXCAVATED FROM THE DITCH, (WHICH IS FREE OF ROCKS, LUMPS, CLODS, OR DEBRIS LARGER THAN TWO (2) INCHES IN THE LARGEST DIMENSION), COMPACTED TO A MINIMUM OF 90% OF MAXIMUM DENSITY AS DETERMINED BY ASTM D698 (STANDARD) AT A MOISTURE CONTENT WITHIN OPTIMUM TO +4% OF OPTIMUM UNDER NON-STRUCTURAL AREAS (ie...YARDS, PASTURES, EASEMENTS) AND TO A MINIMUM OF 98% OF MAXIMUM DENSITY AS DETERMINED BY ASTM D698 (STANDARD) AT A MOISTURE CONTENT WITHIN OPTIMUM TO +4% OF OPTIMUM UNDER NEW STREET AREAS AND STREETS TO BE RECONSTRUCTED.

Ⓑ GRANULAR MATERIAL
MATERIAL SHALL BE BANK RUN RIVER SAND WHICH IS FREE OF DETRIMENTAL QUANTITIES OF CLAY, DEBRIS, OR ORGANIC MATERIAL AND WHICH, WHEN TESTED BY STANDARD LABORATORY METHODS, MEET THE FOLLOWING REQUIREMENTS:
MAXIMUM LIQUID LIMIT ____ 45
MAXIMUM PLASTICITY INDEX ____ 15
MAXIMUM PERCENT PASSING NO. 200 SIEVE ____ 35
MINIMUM PERCENT PASSING 3/4" SIEVE ____ 100
THE MATERIAL SHALL BE FREE FLOWING AND WHEN WET, SHALL NOT ADHERE TO FORM A BALL WHEN PRESSED IN THE HAND.

Ⓒ CEMENT STABILIZED SAND

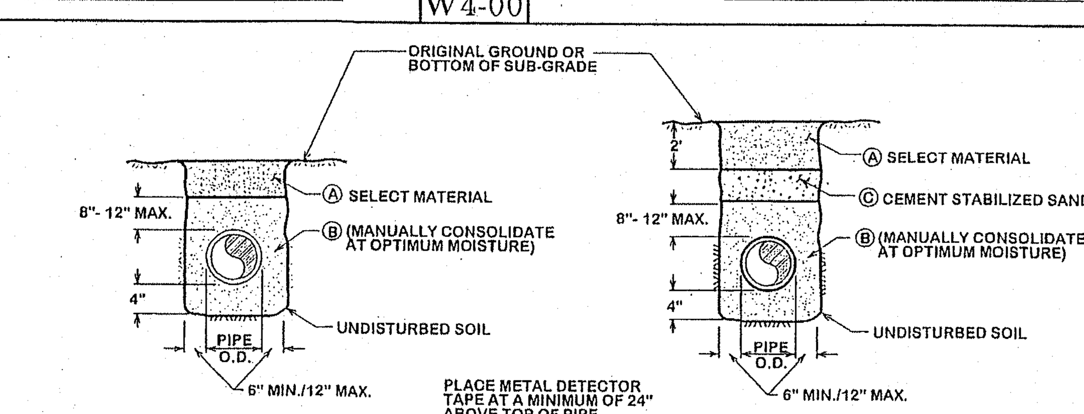

NOTES:
1. *FOR BEDDING AND TRENCHING WITHIN ALL EXISTING PAVED AREAS, SEE DETAILS FOR OPEN CUT STREETS. (Details ST4-00, ST4-01, ST4-02). THIS NOTE DOES NOT APPLY TO STREETS BEING RECONSTRUCTED.*
2. *EVERY 100 FEET PROVIDE A WATER STOP BLOCK COMPOSED OF CEMENT SAND OR NATIVE MATERIAL DEPENDING ON EMBEDMENT. BLOCK SHALL BE 6 FEET IN LENGTH. NO BEDDING SAND IN THIS AREA.*
3. ALL BEDDING & INSTALLATION OF PVC PIPE SHALL BE IN ACCORDANCE WITH ANSI/AWWA STANDARDS FOR PVC PIPE.
4. ALL BEDDING & INSTALLATION OF DUCTILE IRON PIPE SHALL BE IN ACCORDANCE WITH ANSI/AWWA C150/A21.50
5. COMPACTION SHALL BE ATTAINED BY MECHANICAL TAMPING.
6. RELATIVE COMPACTION SHALL BE TESTED IN THE PRESENCE OF THE CITY ENGINEER.
7. DUST RESULTING FROM THE CONTRACTOR'S PERFORMANCE OF THE WORK, EITHER INSIDE OR OUTSIDE THE RIGHT-OF-WAY, SHALL BE CONTROLLED BY THE CONTRACTOR.
8. ALL TRENCHES SHALL BE BACK FILLED AND TEMPORARY PAVING OR PLATING PLACED AT THE END OF EACH WORKING DAY.

BEDDING AND TRENCH FOR DI PIPE & PVC PIPE

W4-02

GENERAL NOTES:

ALL AREAS WHERE EXISTING VEGETATION AND GRASS COVER HAVE BEEN BARED BY CONSTRUCTION SHALL BE ADEQUATELY BLOCK SODDED OR HYDROMULCHED AND WATERED UNTIL GROWTH IS ESTABLISHED. IN DEVELOPED AREAS WHERE GRASS IS PRESENT, BLOCK SOD WILL BE REQUIRED. BARED AREAS SHALL BE SEEDED OR SODDED WITHIN 14 CALENDAR DAYS OF LAST DISTURBANCE.

APPROVED EROSION CONTROL MEASURES MUST BE INSTALLED DURING THE ENTIRE TIME THAT EARTH HAS BEEN BARED BY CONSTRUCTION AND SHALL STAY IN PLACE UNTIL ACCEPTABLE VEGETATIVE GROWTH IS ESTABLISHED AFTER CONSTRUCTION IS COMPLETE AND THEN REMOVED BY CONTRACTOR.

ALL EROSION CONTROL MEASURES SHOULD BE CLEANED OF SILT AFTER EVERY RAIN.

ESTABLISHMENT OF VEGETATION MAY BE A WARRANTY ITEM.

REVISIONS:

BRYAN - COLLEGE STATION STANDARD WATER DETAILS

CITY OF COLLEGE STATION

CITY OF BRYAN
The Good Life, Texas Style.™

DRAWN BY: C.L.M.
DATE: 08-01-12
SCALE: N T S
APPROVED: W. P. K.
FIGURE:
W1
SHEET 1 OF 2