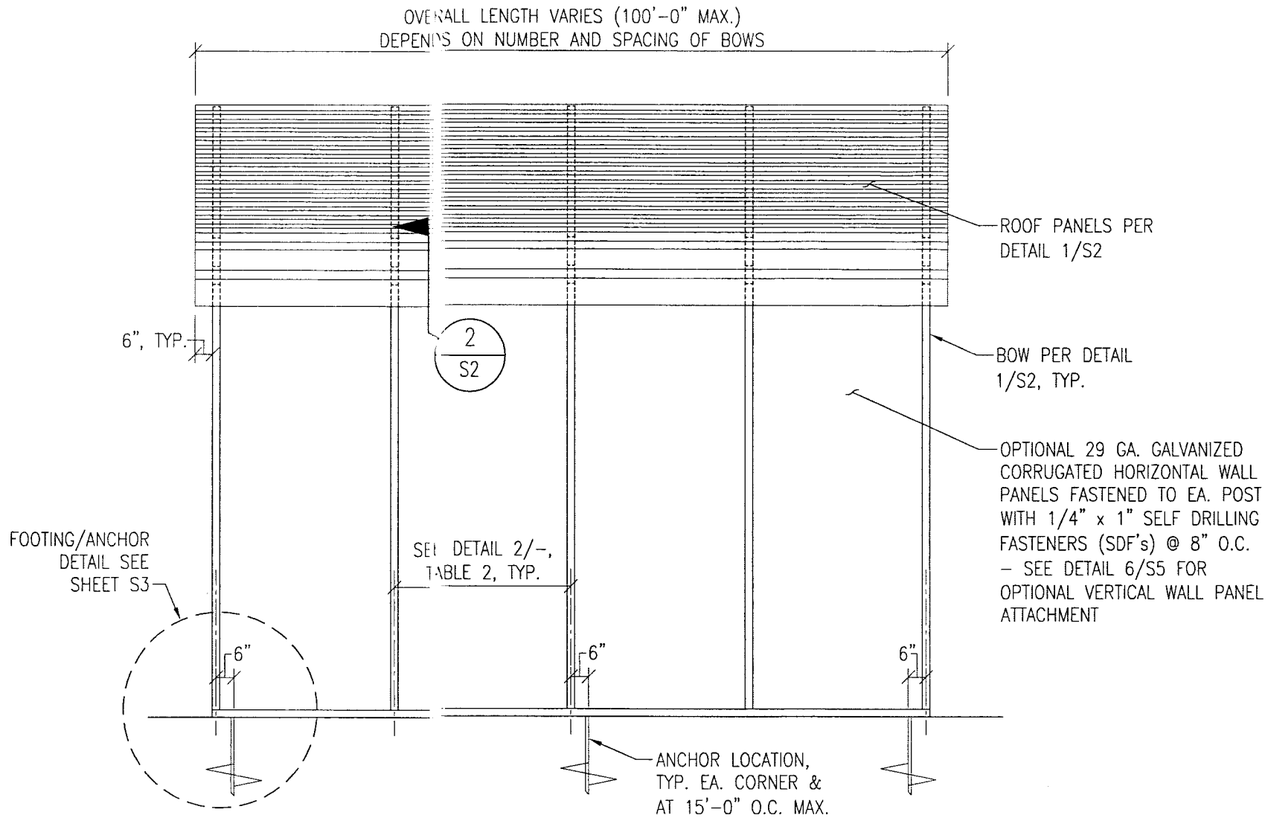

SIDE ELEVATION (1)

N.T.S.

TABLE 2	
BOW SPAN (SEE DETAIL 1/S2)	BOW SPACING
12'-0" TO 24'-0"	5'-0"
26'-0" TO 30'-0"	4'-0"

TABLE 1		
POST HEIGHT	POST/BOW GAGE	
	110 MPH MAX. WIND SPEED 20 PSF MAX. ROOF SNOW	120 MPH MAX. WIND SPEED 30 PSF MAX. ROOF SNOW
5'-0"	14 GA*	12 GA*
8'-0"	14 GA*	12 GA*
10'-0"	14 GA*	12 GA*
12'-0"	14 GA*	12 GA*

* – 14 GA TS SECTIONS TO BE 2-1/2" SQUARE
12 GA TS SECTIONS TO BE 2-1/4" SQUARE

BOW FRAMING TABLES (2)

N.T.S.

DRAWING INDEX

S1 ELEVATION VIEW & NOTES
S2 BOW FRAME DETAILS
S3 ANCHORAGE DETAILS
S4 END WALL ELEVATIONS
S5 DETAILS
S6 DETAILS
S7 DETAILS
S8 DETAILS

CLIENT: Bryan ISD
PROJECT LOCATION: Bryan, Texas

THE DRAWINGS PRESENTED IN THIS PACKAGE ARE INTENDED FOR A SINGLE USE FOR THE CLIENT LISTED ABOVE AT THE LOCATION LISTED ABOVE. THESE DRAWINGS SHALL NOT BE REPRODUCED, REUSED, "CARD FILED", SOLD TO A THIRD PARTY, OR ALTERED IN ANY WAY WITHOUT THE WRITTEN AUTHORIZATION OF VECTOR STRUCTURAL ENGINEERS, PC.

NOTES:

1. DESIGN IS BASED ON THE 2009 INTERNATIONAL BUILDING CODE AND THE ASCE 7-05 STANDARD.
2. LOADS:
   ROOF LIVE LOAD = 20 PSF
   ROOF SNOW LOAD = 30 PSF (MAX.)
   WIND 120 MPH (MAX.), (3-SEC. GUST), EXP. C
   OCCUPANCY CATEGORY: I
3. STEEL STRENGTH SHALL BE AS FOLLOWS:
   12 GA: Fy = 64.5 KSI
   14 GA: Fy = 50 KSI
4. LOCATE ANCHORS AT EACH END OF BOW.
5. FASTEN METAL ROOF PANELS TO BOW FRAME WITH 1/4"x1" SELF DRILLING FASTENERS (SDF) @ 8" O.C. MAX.
6. ALL FIELD CONNECTIONS SHALL BE 1/4"x1" SELF DRILLING SCREWS.
7. ALL SHOP CONNECTIONS SHALL BE WELDED.
8. CONTRACTOR/OWNER TO VERIFY FOOTING REQUIREMENTS WITH LOCAL BUILDING DEPARTMENT PRIOR TO CONSTRUCTION. FOOTING DESIGN IS THE RESPONSIBILITY OF OTHERS.

VECTOR ENGINEERS
9138 S. State St., Suite 101
Sandy, UT 84070
(801) 990-1775
(801) 990-1776 FAX
www.vectorse.com

DATE: 5-13-2013	DESIGNED: BDV	DRAFTER: MGP

REVISIONS

DATE	DESCRIPTION

DESIGNED EXCLUSIVELY FOR
EAGLE CARPORTS, INC.
16398 FANCY GAP HIGHWAY
CANA, VA 24317

STATE OF TEXAS
ROGER T ALWORTH
99911
LICENSED
PROFESSIONAL ENGINEER

NOV 2 6 2013

ELEVATION VIEW & NOTES

STANDARD CARPORT WITH OPTIONS

STANDARD SNOW & WIND RATING

U1319-001-111

S1

REV 0

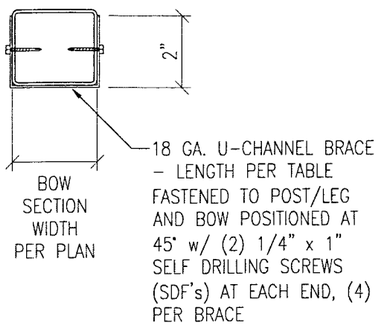

BRACE CONNECTION DETAIL (3)

N.T.S.

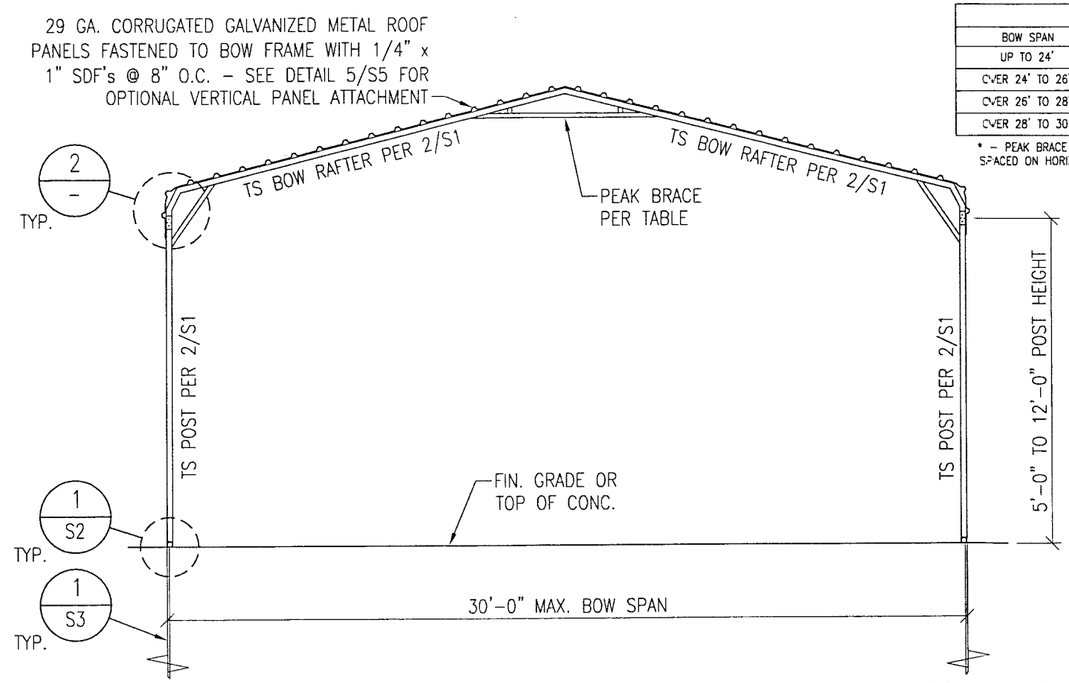

PEAK BRACE TABLE	
BOW SPAN	BRACE
UP TO 24'	2'-0" LONG PER DTL 3/–
OVER 24' TO 26'	6'-0" LONG 2-1/4" SQ. 12 GA. TS*
OVER 26' TO 28'	8'-0" LONG 2-1/4" SQ. 12 GA. TS*
OVER 28' TO 30'	10'-0" LONG 2-1/4" SQ. 12 GA. TS*

* – PEAK BRACE TO HAVE (2) TS VERTS, EQUALLY SPACED ON HORIZONTAL – BRACE TO BE FULLY WELDED

TYPICAL BOW SECTION (1)

N.T.S.

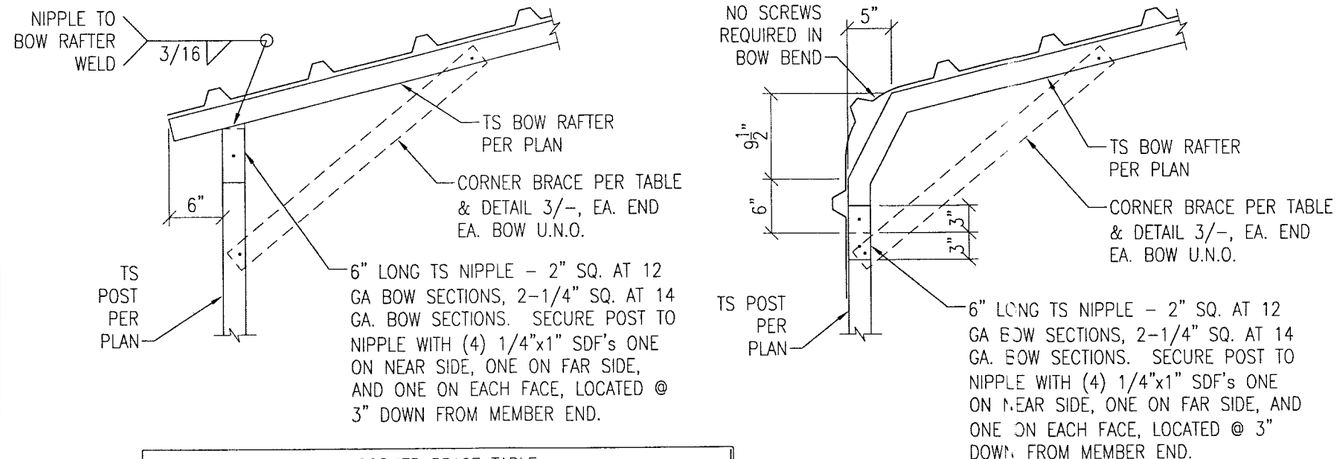

CORNER BRACE TABLE			
12' TO 24' BOW SPAN		26' TO 30' BOW SPAN	
POST HEIGHT	BRACE LENGTH	POST HEIGHT	BRACE LENGTH
5'-0" TO 8'-6"*	2'-0"*	6'-0" TO 8'-6"	2'-0"
9'-0" TO 12'-0"	3'-0"	9'-0" TO 12'-0"	3'-0"

* – CORNER BRACE REQUIRED AT END BOWS ONLY

BOW/POST DETAIL (2)

N.T.S.

VECTOR ENGINEERS
9138 S. State St., Suite 101 (801) 990-1775
Sandy, UT 84070 (801) 990-1776 FAX
www.vectorse.com

DATE: 5-13-2013	DESIGNED: BDV	DRAFTER: MGP

REVISIONS

DATE	DESCRIPTION

DESIGNED EXCLUSIVELY FOR
EAGLE CARPORTS, INC.
16398 FANCY GAP HIGHWAY
CANA, VA 24317

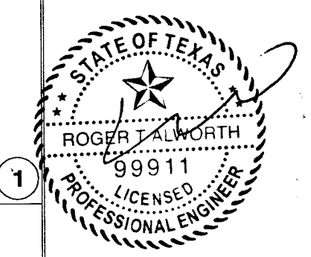

NOV 2 6 2013

BOW FRAME DETAILS

STANDARD CARPORT WITH OPTIONS

STANDARD SNOW & WIND RATING

U1319-001-111

S2

REV 0

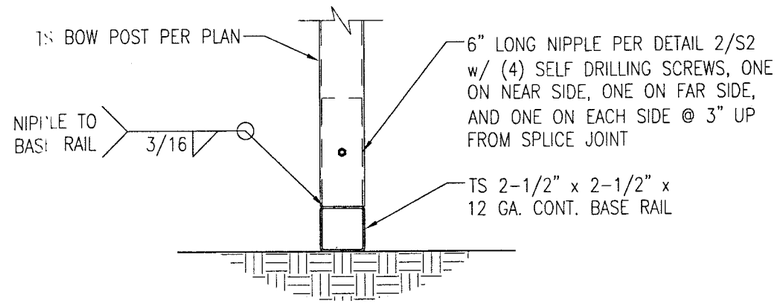

BOW/BASE RAIL CONNECTION DETAIL (3)

N.T.S.

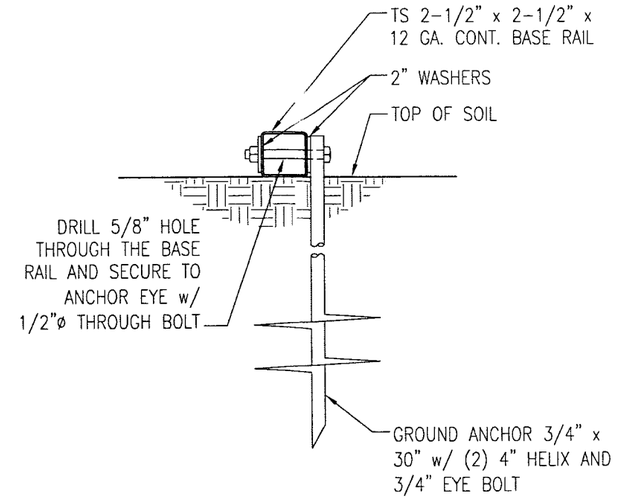

BASE RAIL ANCHORAGE (1)

N.T.S.

CONCRETE:
CONCRETE SHALL HAVE A MIN. SPECIFIED COMPRESSIVE STRENGTH OF 2500 PSI AT 28 DAYS.

COVER OVER REINFORCING STEEL
FOR FOUNDATIONS, MIN. CONCRETE COVER OVER REINFORCING BARS SHALL BE:
3" IN FOUNDATION WHERE THE CONCRETE IS CAST AGAINST AND PERMANENTLY IN CONTACT WITH THE EARTH OR EXPOSED TO THE EARTH OR WEATHER AND 1-1/2" ELSEWHERE.

REINFORCING STEEL
THE REINFORCING STEEL SHALL BE MIN. GRADE 40

GALVANIZATION
METAL ACCESSORIES FOR USE IN EXTERIOR WALL CONSTRUCTION AND NOT DIRECTLY EXPOSED TO THE WEATHER SHALL BE GALVANIZED IN ACCORDANCE WITH ASTM A 153, CLASS B-2, METAL PLATE CONNECTORS, SCREWS AND NAILS EXPOSED DIRECTLY TO THE WEATHER SHALL BE STAINLESS STEEL OR HOT DIPPED GALVANIZED.

REINFORCEMENT MAY BE BENT IN THE SHOP OR THE FIELD PROVIDED:
1. ALL REINFORCEMENT IS BENT COLD
2. THE DIAMETER OF THE BEND, MEASURED ON THE INSIDE OF THE BAR, IS NOT LESS THAN SIX BAR DIAMETERS
3. REINFORCEMENT PARTIALLY EMBEDDED IN CONCRETE SHALL NOT BE FIELD BENT. EXCEPTION: WHERE BENDING IS NECESSARY TO ALIGN DOWEL BARS WITH A VERTICAL CELL, BARS PARTIALLY EMBEDDED IN CONCRETE SHALL BE PERMITTED TO BE BENT AT A SLOPE OF NOT MORE THAN 1" OF HORIZONTAL DISPLACEMENT TO 6" OF VERTICAL BAR LENGTH.

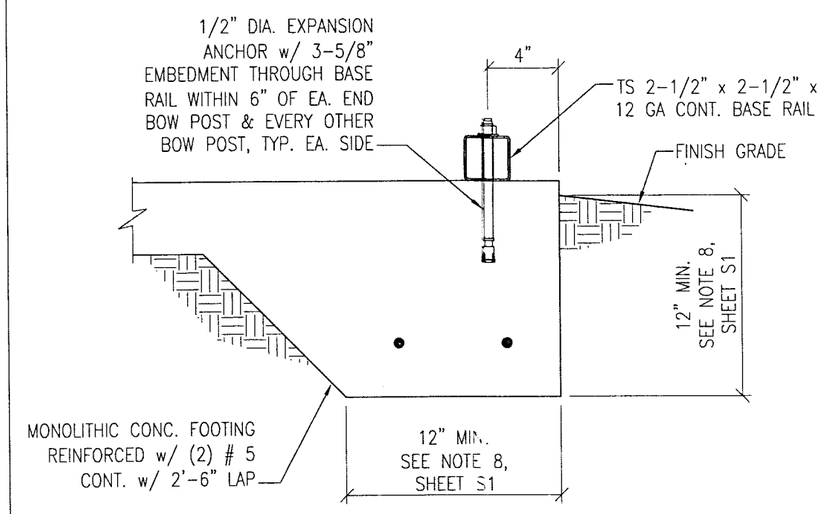

CONCRETE BASE RAIL ANCHORAGE (2)

N.T.S.

VECTOR ENGINEERS
9138 S. State St., Suite 101 (801) 990-1775
Sandy, UT 84070 (801) 990-1776 FAX
www.vectorse.com

DATE: 5-13-2013	DESIGNED: BDV	DRAFTER: MGP

REVISIONS

DATE	DESCRIPTION

DESIGNED EXCLUSIVELY FOR
EAGLE CARPORTS, INC.
16398 FANCY GAP HIGHWAY
CANA, VA 24317

STATE OF TEXAS
ROGER T. ALWORTH
99911
LICENSED
PROFESSIONAL ENGINEER

NOV 2 6 2013

ANCHORAGE DETAILS

STANDARD CARPORT WITH OPTIONS

STANDARD SNOW & WIND RATING

U1319-001-111

S3 REV 0

NOTE:

EXTERIOR WINDOWS AND GLASS DOORS SHALL BE TESTED BY AN APPROVED INDEPENDENT TESTING LABORATORY, AND BEAR AN AAMA OR WDMA OR OTHER APPROVED LABEL IDENTIFYING THE MANUFACTURER, PERFORMANCE CHARACTERISTICS AND APPROVED PRODUCT EVALUATION ENTITY TO INDICATE COMPLIANCE WITH THE REQUIREMENTS OF THE FOLLOWING SPECIFICATION:

ANSI/AAMA/NWWDA 101/IS2 2/97
THE CONSTRUCTION SHALL BE TESTED IN ACCORDANCE WITH ASTM E 330, STANDARD TEST METHODS FOR STRUCTURAL PERFORMANCE OF EXTERIOR WINDOWS, CURTAIN WALLS, AND DOORS BY UNIFORM STATIC PRESSURE.

DOOR TABLE	
CARPORT WIDTH	MAX. DOOR WIDTH
12'-0" TO 18'-0"	10'-0"
20'-0"	12'-0" OR (2) 8'-0"
22'-0"	12'-0" OR (2) 9'-0"
24'-0" TO 28'-0"	16'-0" OR (2) 10'-0"
30'-0"	16'-0" OR (2) 12'-0"

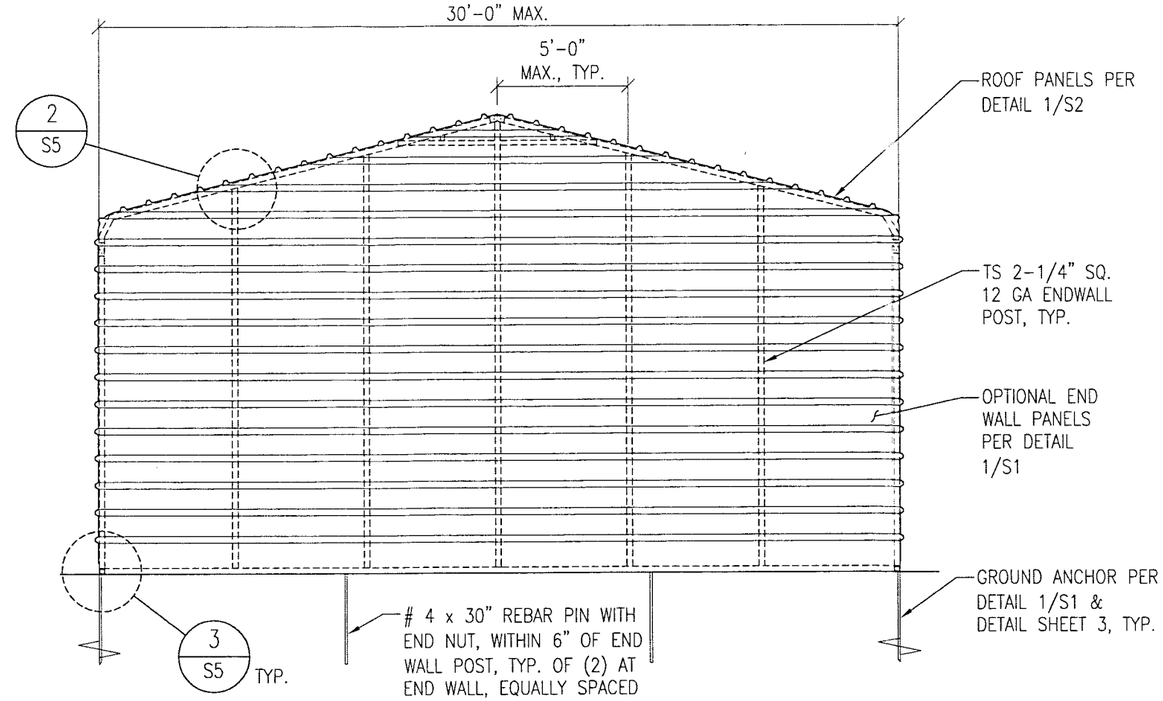

REAR WALL ELEVATION (1)

N.T.S.

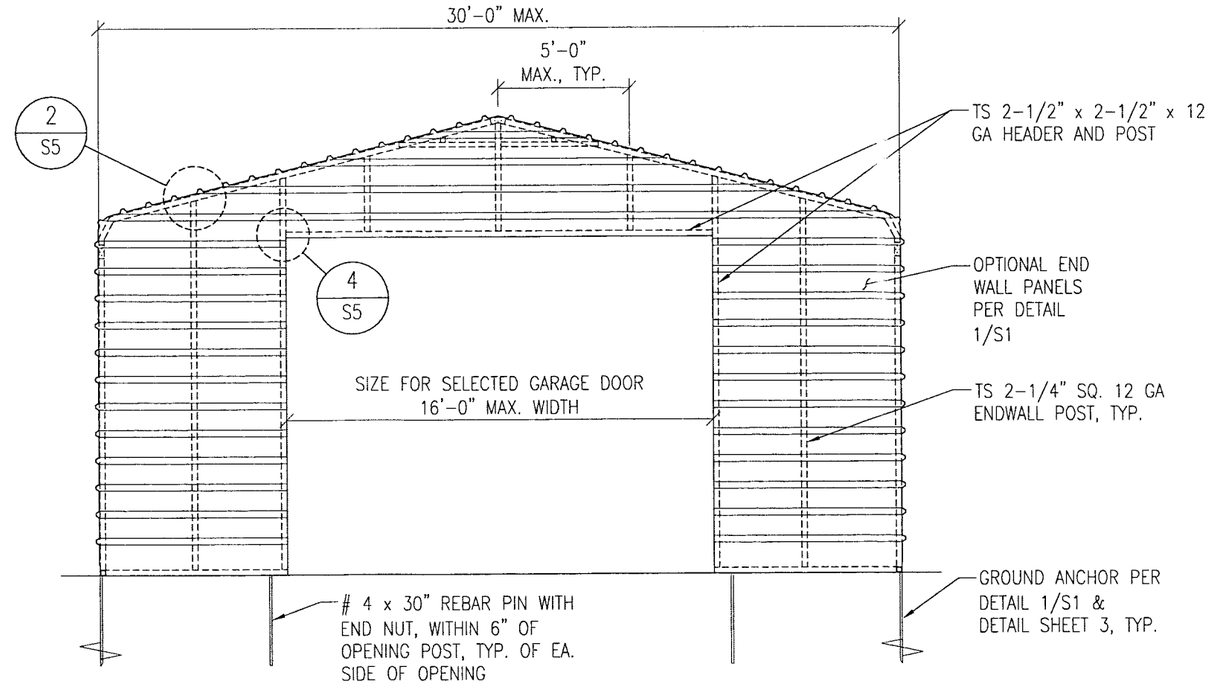

FRONT WALL ELEVATION (2)

N.T.S.

VECTOR ENGINEERS
9138 S. State St., Suite 101 (801) 990-1775
Sandy, UT 84070 (801) 990-1776 FAX
www.vectorse.com

DATE: 5-13-2013	DESIGNED: BDV	DRAFTER: MGP

REVISIONS

DATE	DESCRIPTION

DESIGNED EXCLUSIVELY FOR
EAGLE CARPORTS, INC.
16398 FANCY GAP HIGHWAY
CANA, VA 24317

STATE OF TEXAS
ROGER T. ALWORTH
99911
LICENSED
PROFESSIONAL ENGINEER

NOV 2 6 2013

END WALL ELEVATIONS

STANDARD CARPORT WITH OPTIONS

STANDARD SNOW & WIND RATING

U1319-001-111

S4

REV 0

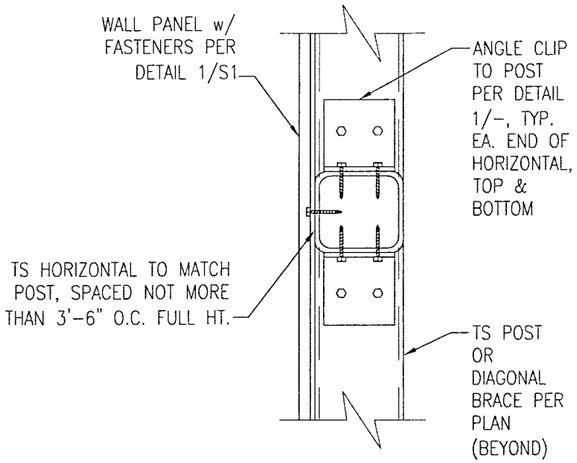

FLUSH TS HORIZONTAL OPTION

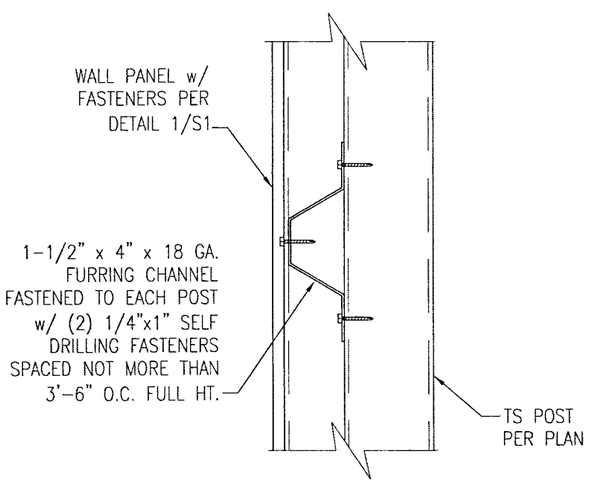

FURRING CHANNEL OPTION

VERTICAL WALL PANEL ATTACHMENT (6)
N.T.S.

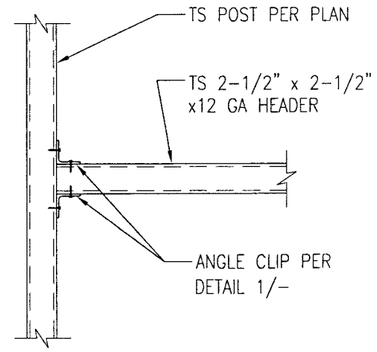

HEADER TO POST CONN. DETAIL (4)
N.T.S.

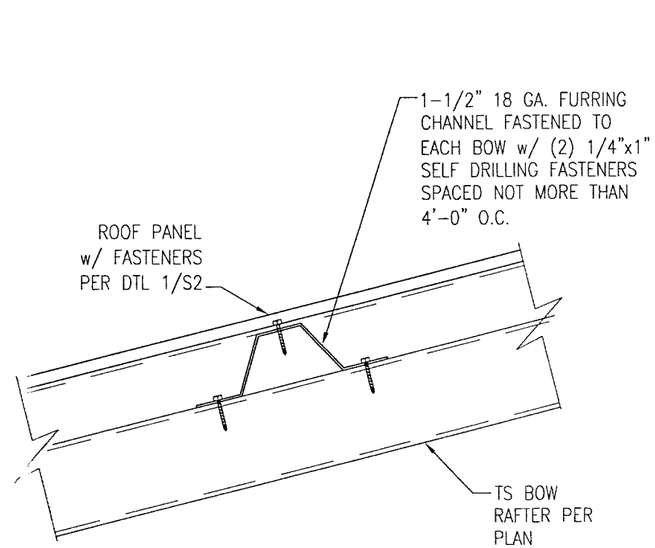

VERTICAL ROOF PANEL ATTACHMENT (5)
N.T.S.

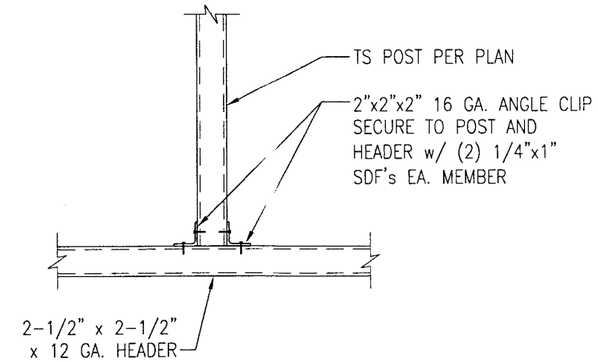

END POST TO HEADER/RAIL CONN. DETAIL (1)
N.T.S.

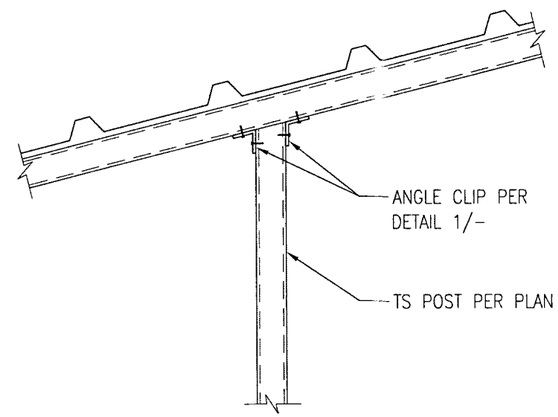

END POST/BOW CONN. DETAIL (2)
N.T.S.

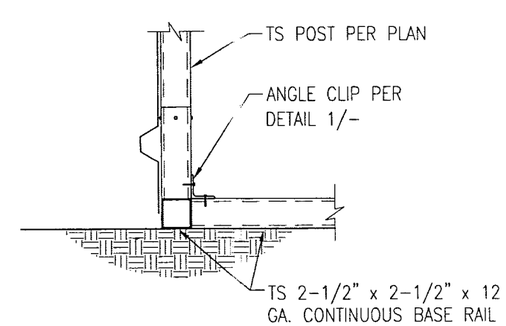

END BOW/BASE RAIL CONN. DETAIL (3)
N.T.S.

VECTOR ENGINEERS
9138 S. State St., Suite 101 (801) 990-1775
Sandy, UT 84070 (801) 990-1776 FAX
www.vectorse.com

DATE: 5-13-2013	DESIGNED: BDV	DRAFTER: MGP

REVISIONS

DATE	DESCRIPTION

DESIGNED EXCLUSIVELY FOR
EAGLE CARPORTS, INC.
16398 FANCY GAP HIGHWAY
CANA, VA 24317

STATE OF TEXAS
ROGER T. ALWORTH
99911
LICENSED
PROFESSIONAL ENGINEER

NOV 2 6 2013

DETAILS

STANDARD CARPORT WITH OPTIONS

STANDARD SNOW & WIND RATING

U1319-001-111

S5

REV 0

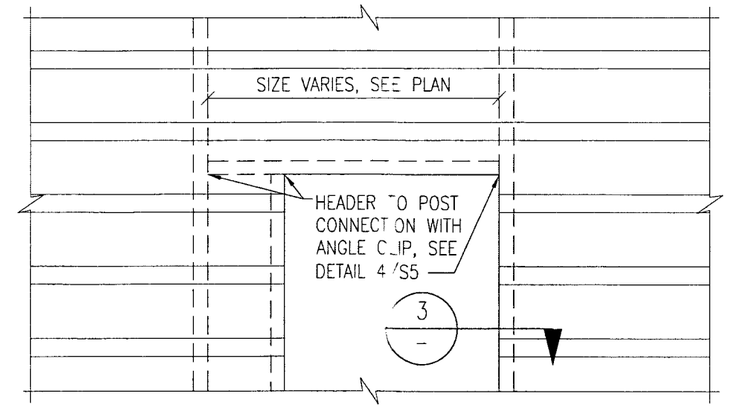

DOOR FRAME, PLAN VIEW (1)

N.T.S.

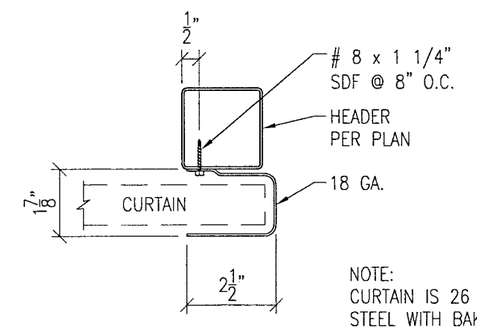

NOTE:
CURTAIN IS 26 GA. GALVANIZED STEEL WITH BAKED ON EPOXY PRIMER & POLYESTER TOP COAT.

SECTION THROUGH ROLL UP DOOR HEADER (2)

N.T.S.

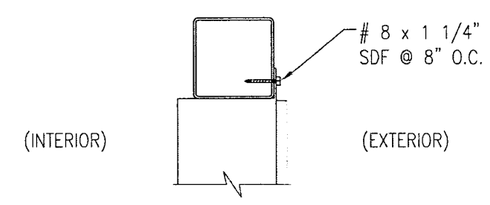

SECTION (3)

N.T.S.

VECTOR ENGINEERS
9138 S. State St., Suite 101
Sandy, UT 84070
(801) 990-1775
(801) 990-1776 FAX
www.vectorse.com

DATE: 5-13-2013	DESIGNED: BDV	DRAFTER: MGP

REVISIONS

DATE	DESCRIPTION

DESIGNED EXCLUSIVELY FOR
EAGLE CARPORTS, INC.
16398 FANCY GAP HIGHWAY
CANA, VA 24317

STATE OF TEXAS
ROBERT ALNORTH
99911
LICENSED
PROFESSIONAL ENGINEER

NOV 2 6 2013

DETAILS

STANDARD CARPORT WITH OPTIONS

STANDARD SNOW & WIND RATING

U1319-001-111

S6

REV 0

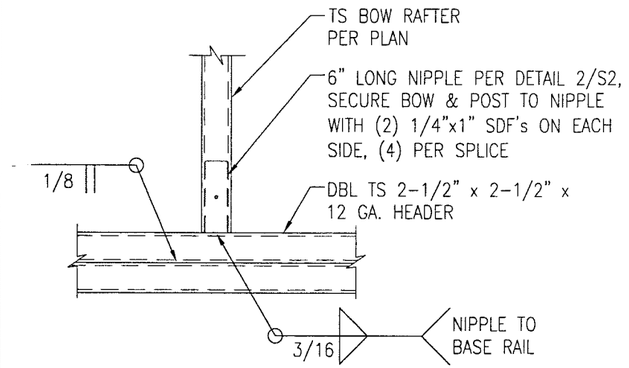

BOW/HEADER DETAIL (3)

N.T.S.

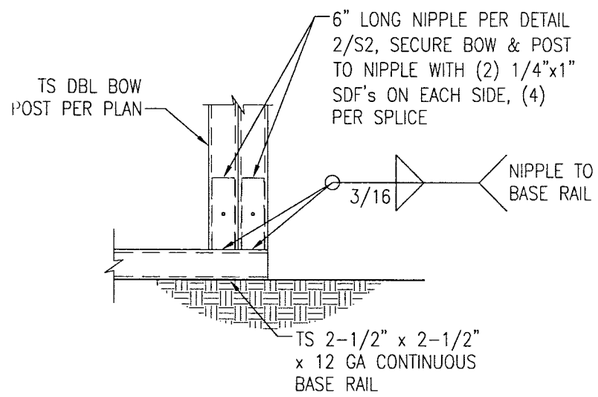

BOW/BASE RAIL CONN. DETAIL (4)

N.T.S.

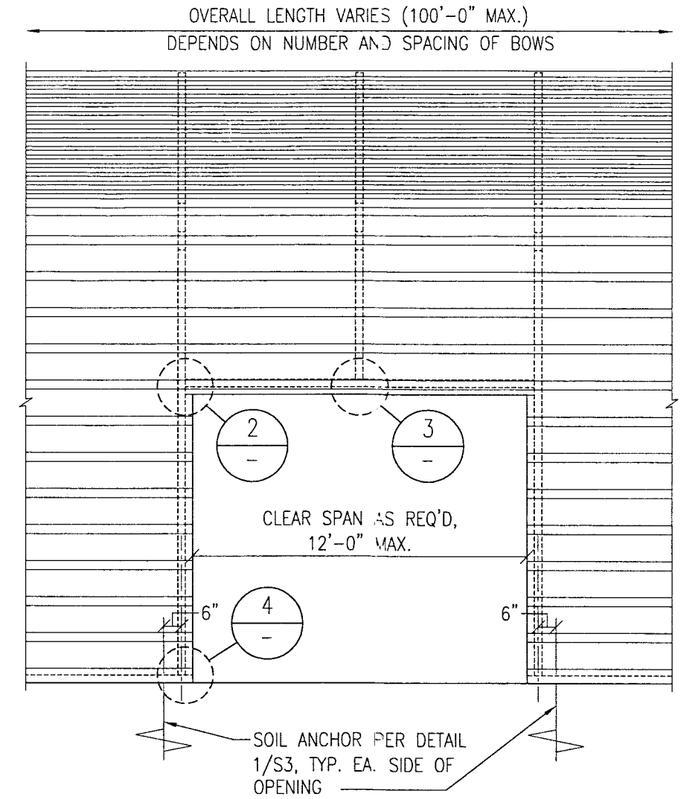

SIDE OPENING (1)

N.T.S.

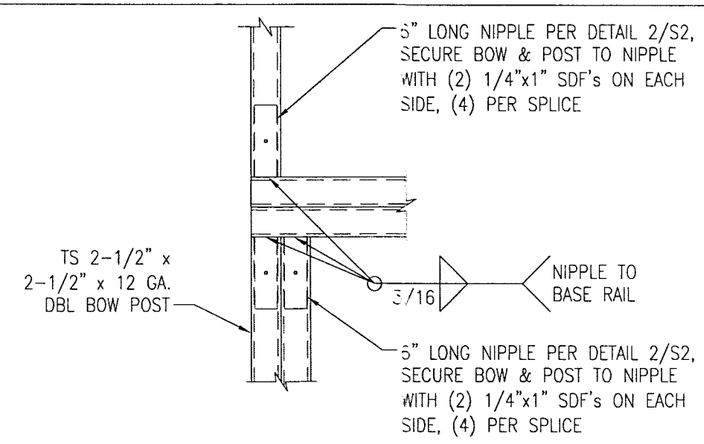

BOW/POST DETAIL (2)

N.T.S.

VECTOR ENGINEERS
9138 S. State St., Suite 101 (801) 990-1775
Sandy, UT 84070 (801) 990-1776 FAX
www.vectorse.com

DATE: 5-13-2013	DESIGNED: BDV	DRAFTER: MGP

REVISIONS

DATE	DESCRIPTION

DESIGNED EXCLUSIVELY FOR
EAGLE CARPORTS, INC.
16398 FANCY GAP HIGHWAY
CANA, VA 24317

STATE OF TEXAS
ROGER ALWORTH
99911
LICENSED
PROFESSIONAL ENGINEER

NOV 2 6 2013

DETAILS

STANDARD CARPORT WITH OPTIONS

STANDARD SNOW & WIND RATING

U1319-001-111

S7

REV 0

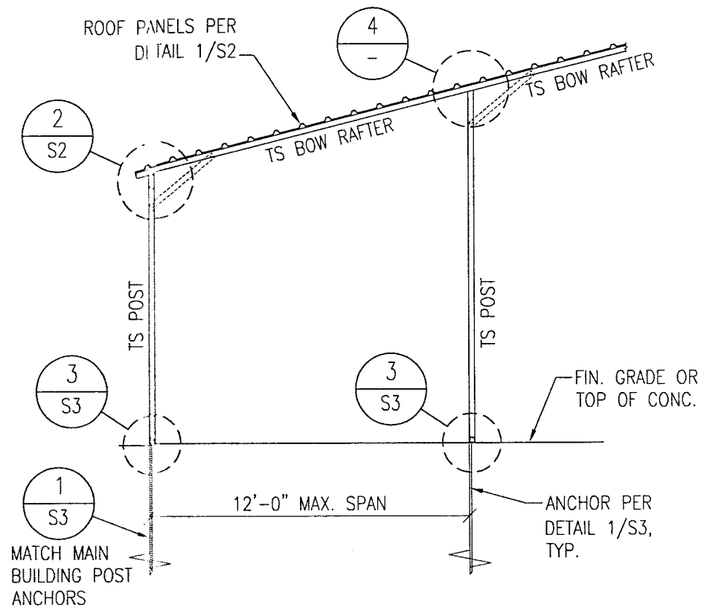

IN-LINE EXTENSION SECTION (3)

N.T.S.

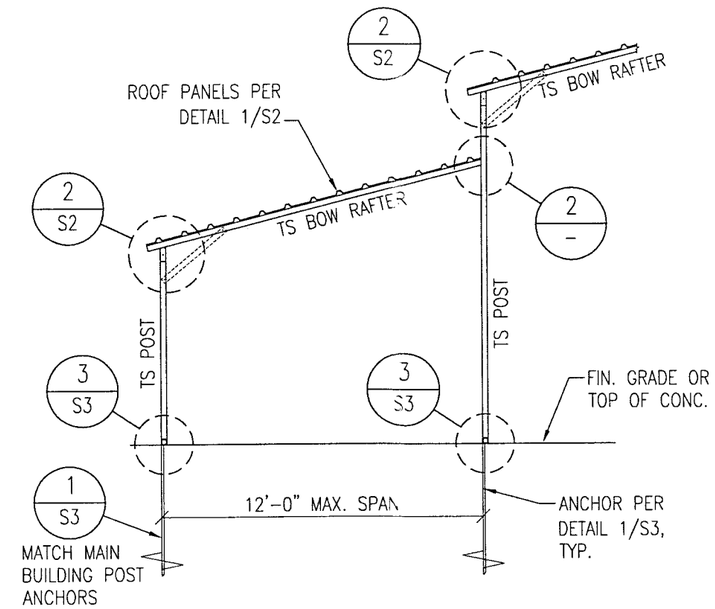

STEP-DOWN EXTENSION SECTION (1)

N.T.S.

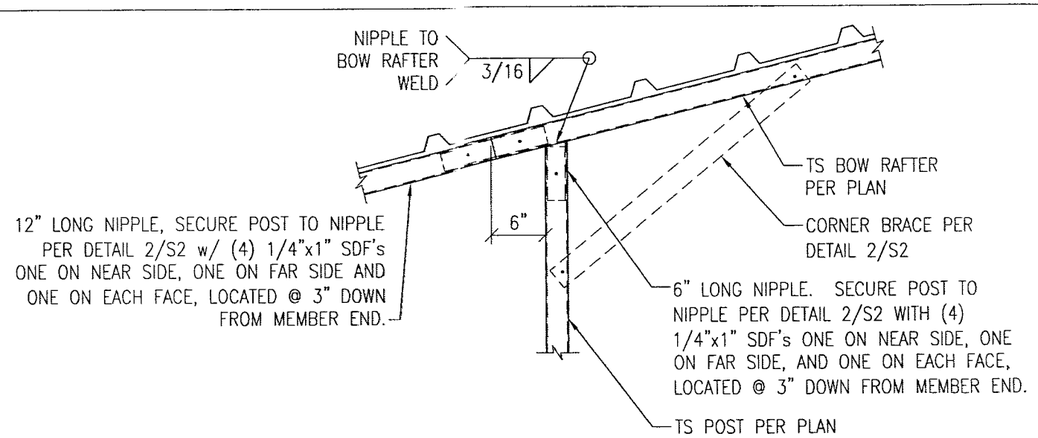

IN-LINE CONNECTION DETAIL (4)

N.T.S.

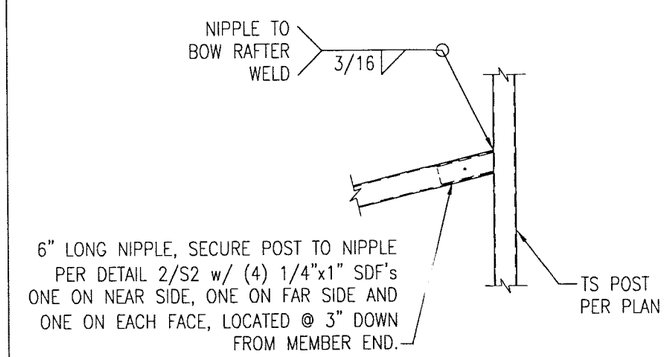

STEP-DOWN CONNECTION DETAIL (2)

N.T.S.

VECTOR ENGINEERS
9138 S. State St., Suite 101 (801) 990-1775
Sandy, UT 84070 (801) 990-1776 FAX
www.vectorse.com

DATE: 5-13-2013	DESIGNED: BDV	DRAFTER: MGP

REVISIONS

DATE	DESCRIPTION

DESIGNED EXCLUSIVELY FOR
EAGLE CARPORTS, INC.
16398 FANCY GAP HIGHWAY
CANA, VA 24317

STATE OF TEXAS
ROGER TALLWORTH
99911
LICENSED
PROFESSIONAL ENGINEER

NOV 2 6 2013

DETAILS

STANDARD CARPORT WITH OPTIONS

STANDARD SNOW & WIND RATING

U1319-001-111

S8

REV 0