HARMONY SCHOOL ACADEMY
2131 S. TEXAS AVENUE
BRYAN, TEXAS 77802

PERMIT SET
ISSUED: MAY 1, 2013

RECEIVED
MAY 08 2013

REGISTERED ARCHITECT — 5-3-13

ISSUE DATES	
05-01-13	PERMIT SET

PARKING CALCULATIONS

DESCRIPTION	STUDENT COUNT	BRYAN PARKING COEFFICIENT	REQUIRED PARKING SPACES	PROVIDED PARKING SPACES
EXISTING HARMONY SCHOOL-ELEMENTARY	288 STUDENTS	1 SPACES PER 20 STUDENTS	14.4	
EXISTING HARMONY SCHOOL-MID. SCHOOL	168 STUDENTS	1 SPACES PER 15 STUDENTS	11.2	
EXISTING HARMONY SCHOOL-HIGH SCHOOL	78 STUDENTS	1 SPACES PER 3 STUDENTS	26	
EXISTING SCHOOL TOTALS			51.6	126
NEW MODULAR BUILDINGS ELEMENTARY ONLY	6 NEW CLASSROOMS	1 SPACES PER 20 STUDENTS	12	
TOTAL SPACES			64	126
H.C. SPACES PROVIDED				5

17 PARKING CALCULATIONS

13 LOCATION MAP

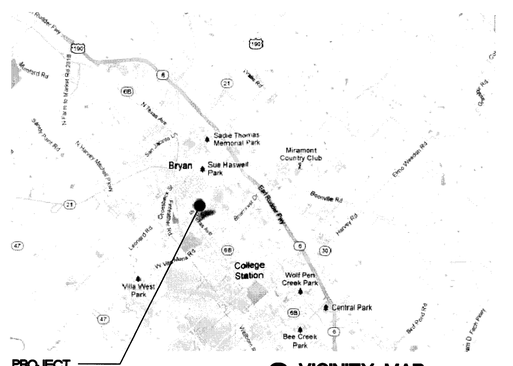

8 VICINITY MAP

DRAWING INDEX AND ISSUE DATES

		ISSUE FOR PERMIT	
G1.0	TITLE – CODE ANAYLSIS	05-1-13	
	PLAT/SURVEY	05-1-13	
A1.1	ARCHITECTURAL SITE PLAN	05-1-13	
RAMP-3	RAMP AND STAIR DETAILS	05-1-13	
E1.1	ELECTRICAL-PLUMBING SITE PLAN	05-1-13	
AMTEX 1-10	MODULAR BUILDING PLAN SET SHEETS 1-10	05-1-13	

PROJECT SCOPE:

INSTALL 3 MANUFACTURED MODULAR BUILDING IN THE EXISTING NORTHWEST CORNER OF THE EXISTING PROPERTY. ADD COVERED WALKWAY FOR WALKWAYS TO BUILDINGS. ADD DECK PLATFORMS WITH STAIRS AND RAMPS TO MEET ADA REQUIREMENTS FOR ACCESS.

INSTALL NEW ELECTRICAL SERVICE FROM EXISTING BUILDINGS.

CANOPY BY DEFERRED PERMIT

4 PROJECT SCOPE

HEIGHTS VENTURE ARCHITECTS, L.L.P.
HOUSTON: 1111 North Loop West, Suite 800, Houston, Texas 77008, 713 869 1103 V
DALLAS: 5717 Legacy Drive, Suite 240, Plano, Texas 75024, 972 490 7200 V

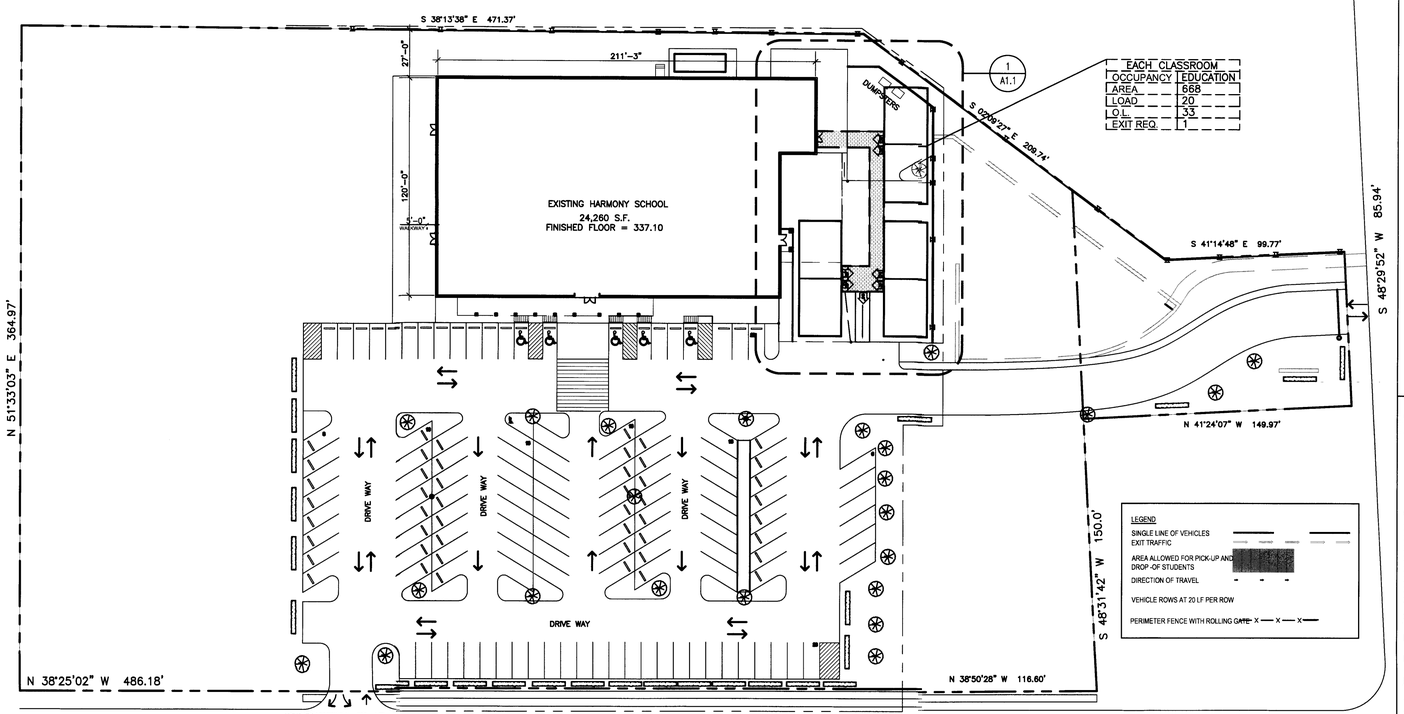

EACH CLASSROOM	
OCCUPANCY	EDUCATION
AREA	668
LLOAD	20
O.L.	33
EXIT REQ.	1

9 SITE PLAN
SCALE: 1"=40'

OWNER
HARMONY PUBLIC SCHOOLS
9431 W. SAM HOUSTON PKWY. S
SUITE 202
HOUSTON, TX. 77099
PH 713.343.3333 EXT. 173
CONTACT: MUSTAFA YAYKIRAN

MEP ENGINEER
ADVANCED TECHNOLOGIES INC.
13105 N.W. FREEWAY
SUITE 690
HOUSTON TEXAS 77040
PH 713.896.6900
FX 713.896.6992

ARCHITECT
HEIGHTS VENTURE ARCHITECTS, L.L.P.
1111 NORTH LOOP WEST, SUITE 800
HOUSTON, TEXAS 77008
PH: 713.869.1103
FX: 713.869.5573
CONTACT: LINDA LEONETTI

CIVIL - STRUCTURE ENGINEER
ALI LINDSEY
CMI ENGINEERS
6111 F.M. 1960 W., SUITE 208
HOUSTON, TEXAS 77069
PH: 281.301.5955
FRN F-1 1526

6 CONTACT INFO

CODE JURISDICTION:
CITY OF BRYAN

EGRESS REQUIRMENTS:
OCCUPANCY LOAD
6 CLASSROOMS AT 33 EACH = 198 O.L.

EGRESS INCHES REQUIRED:
198 O.L. X .3 = 60"

EGRESS INCHES PROVIDED: =216"

APPLICABLE CODE INFORMATION:

2009	INTERNATIONAL BUILDING CODE
2009	INTERNATIONAL EXISTING BUILDING CODE
2009	INTERNATIONAL ENERGY CONSERVATION CODE
2005	NATIONAL ELECTRIC CODE
2009	INTERNATIONAL FIRE CODE
2009	INTERNATIONAL MECHANICAL CODE
2009	INTERNATIONAL PLUMBING CODE
2009	FUEL GAS CODE

CONSTRUCTION TYPE AND FIRE SEPARATION:

EXISTING BUILDING: TYPE IIB

MODULAR BUILDINGS: TYPE VB

BUILDING SEPARATION TABLE 602

TYP. IIB 10' < X < 30' = 0 HR.
TYP. VB 10' < TYP. VBX < 30' = 0 HR.

5 BUILDING CODES

GENERAL NOTES:

1. THE DOCUMENTS ARE TO BE CONSIDERED A WHOLE PACKAGE AND SHALL NOT BE BROKEN OUT INTO PIECES-EITHER BY TRADE, ROOMS OR EQUIPMENT. THE G.C. SHALL REFER TO ALL SHEETS FOR RELEVANT INFORMATION INCLUDING ADDITIONAL INFORMATION TO BE PROVIDED BY THE OWNER, SUCH AS BUT NOT LIMITED TO SPECIAL FINISHING REQUIREMENTS, ANY CHANGES OR MODIFICATIONS, ETC.
2. ALL WORK SHALL COMPLY WITH APPLICABLE NATIONAL AND LOCAL CODES AND ORDINANCES, AS WELL AS UNDERWRITERS REGULATIONS HAVING JURISDICTION. THE CONTRACTORS SHALL ALSO COMPLY WITH ALL RULES AND REGULATIONS OF THE BUILDING OWNER, IF APPLICABLE.
3. ALL CONTRACTORS SHALL VISIT THE SITE TO DETERMINE THE EXISTING CONDITIONS. NOTIFY THE ARCHITECT IMMEDIATELY IF THERE ARE ANY DISCREPANCIES BETWEEN EXISTING CONDITIONS AND THE CONSTRUCTION DOCUMENTS.
4. ALL PERMITS NECESSARY FOR THE PROPER EXECUTION OF THE WORK SHALL BE SECURED AND PAID FOR BY THE CONTRACTOR. THE CONTRACTOR IS RESPONSIBLE FOR FINAL CERTIFICATES AND COORDINATING RELATED AND NECESSARY INSPECTIONS.
5. CONTRACTOR SHALL MAINTAIN AND SUBMIT TO OWNER OR HIS REPRESENTATIVE THE REQUIRED CERTIFICATES OF INSURANCE PRIOR TO COMMENCEMENT OF WORK.
6. THE WORK INCLUDES THE FURNISHING OF ALL LABOR, MATERIALS AND EQUIPMENT AND SERVICES NECESSARY FOR, AND REASONABLY INCIDENTAL TO THE COMPLETION, IN PLACE, OF ALL WORK ILLUSTRATED AND DESCRIBED IN THE DRAWINGS AND SPECIFICATIONS.
7. CONTRACTOR SHALL BE FAMILIAR WITH JOB SITE CONDITIONS AND THE LACK OF SPECIFIC INFORMATION ON THE DRAWINGS SHALL NOT RELIEVE HIM OF ANY RESPONSIBILITY. CONTRACTOR SHALL THOROUGHLY ACQUAINT HIMSELF WITH THE CONSTRUCTION DETAILS BEFORE SUBMITTING HIS BID AS NO ALLOWANCES WILL BE MADE BECAUSE OF THE CONTRACTOR'S UNFAMILIARITY WITH THE JOB SITE CONDITIONS.
8. CONDITIONS DEPICTED ON THESE DRAWINGS HAVE BEEN COMPILED FROM AVAILABLE INFORMATION AND MUST BE VERIFIED WITH ON-SITE CONDITIONS. WRITTEN DIMENSIONS ON DRAWINGS SHALL HAVE PRECEDENCE OVERSCALED DIMENSIONS. CONTRACTORS SHALL VERIFY, AND BE RESPONSIBLE FOR ALL DIMENSIONS AND CONDITIONS AT THE BUILDING SITE AND SHALL REPORT ANY DISCREPANCIES TO THE ARCHITECT PRIOR TO PROCEEDING WITH THE WORK.
9. THE CONTRACTORS SHALL RECEIVE, HANDLE, STORE (WHEN NECESSARY) AND BE RESPONSIBLE FOR ALL MATERIALS PROVIDED BY OTHERS. ALL MATERIALS SHALL BE ACCOUNTED FOR UPON RECEIPT AND ANY MISSING OR DAMAGED PARTS SHALL BE REPORTED TO THE ARCHITECT AND/OR OWNER IMMEDIATELY.
10. THE CONTRACTORS SHALL REMOVE RUBBISH AND DEBRIS FROM THE BUILDING SITE PROMPTLY UPON ACCUMULATION AND IN NO EVENT LESS FREQUENTLY THAN EVERY FRIDAY AFTERNOON.
11. CONTRACTOR SHALL PROVIDE PUBLIC PROTECTION AS NECESSARY AND AS REQUIRED BY THE CODES.
12. ALL DELIVERIES AND MODIFICATIONS TO THE BUILDING SHALL BE COORDINATED WITH THE BUILDING OWNER, IF APPLICABLE.
13. MINOR ITEMS AND ACCESSORIES REASONABLY INFERRED AS NECESSARY TO COMPLETE AND PROPERLY OPERATE ANY SYSTEM, SHALL BE PROVIDED BY THE RESPECTIVE CONTRACTOR AT NO ADDITIONAL COST TO THE OWNER AND/OR TENANT.
14. THE CONTRACTORS SHALL INSTALL ALL MANUFACTURED ITEMS, MATERIALS AND EQUIPMENT IN STRICT ACCORDANCE WITH THE MANUFACTURER'S SPECIFICATION RECOMMENDATIONS.
15. CONTRACTORS SHALL VERIFY AND COORDINATE WITH THE OWNER ALL FIXTURES AND EQUIPMENT TO BE FURNISHED BY OTHERS OR BY OWNER.
16. STATEMENT OF COMPLIANCE: THE ATTACHED PLANS AND SPECIFICATIONS HAVE BEEN PREPARED, OR CAUSED TO BE PREPARED, UNDER THE ARCHITECT'S DIRECT SUPERVISION. TO THE BEST OF THE ARCHITECT'S KNOWLEDGE AND BELIEF, AND TO THE EXTENT OF CONTRACTUAL OBLIGATION, THEY ARE IN COMPLIANCE WITH THE AMERICANS WITH DISABILITIES ACT, ACCESSIBILITY GUIDELINES (PUBLIC LAW 101-336, JULY 26, 1991), AND TEXAS ACCESSIBILITY STANDARDS (v. 1994).
17. GAPS BETWEEN DIFFERENT MATERIALS AND OR AT CORNERS SHALL BE THOUROUGHLY SEALED.
18. COLORS AND MATERIALS SHALL BE SELECTED BY OWNER UNLESS SPECIFICALLY NOTED OTHERWISE IN THESE DOCUMENTS.
19. ALL OVERHEAD CONDUIT, UTILITIES, AND DUCT TO BE LOCATED ABOVE BOTTOM OF BAR JOIST WHENEVER POSSIBLE. HOLD TIGHT TO BOTTOM OF STRUCTURE.
20. AT THE CONCLUSION OF THE WORK THE EXTERIOR AREA WILL BE CLEARED OF ALL CONSTRUCTION DEBRIS. ALL FOREIGN MATTER, MARKS, STAINS, FOREIGN PAINT AND DIRT WILL BE REMOVED FROM ALL SURFACES.

1 GENERAL NOTES

HARMONY SCIENCE ACADEMY
2031 S. TEXAS AVENUE
BRYAN, TRXAS 77802
A PROJECT FOR COSMOS FOUNDATION, INC.

PROJECT NO.	12135-200
DATE PLOTTED:	04-30-13
CHECKED BY: SR	DRAWN BY: LL
FILE NAME:	

SHEET TITLE
TITLE SHEET

SHEET NUMBER
G1.0

© COPYRIGHT 2012 HEIGHTS VENTURE ARCHITECTS, LLP

GENERAL NOTES:

1. SEE AMTEX MANUFACTURED PLANS FOR MODULAR BUILDING.
2. SEE SHEETS TD-1 FOR FOUNDATION PLANS.
3. SEE THIS SHEET A1.1 FOR TAS RAMP AND STAIRS DETAILS.
4. SEE SHEET EP1 FOR ELECTRICAL AND PLUMBING CONNECTIONS TO BUILDING.
5. SEE A1.2 FOR FIRE PROTECTION.

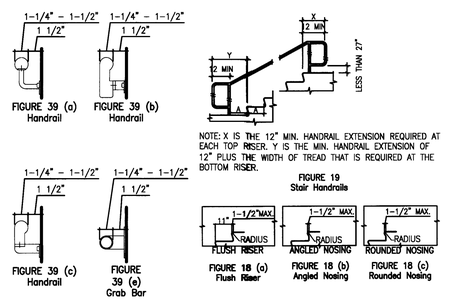

7 ADA HANDRAIL & TREAD DIMENSIONS
SCALE: NTS

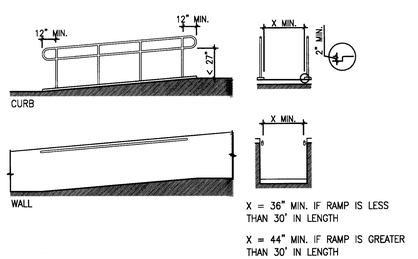

6 ADA RAMP DETAIL
SCALE: 3/16" = 1'-0"

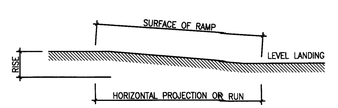

SLOPE	MAXIMUM RISE in	MAXIMUM RISE mm	MAXIMUM HORIZONTAL PROJECTION ft	MAXIMUM HORIZONTAL PROJECTION m
1:12 TO < 1:16	30	760	30	9
1:16 TO < 1:20	30	760	40	12

COMPONENTS OF A SINGLE RAMP RUN AND SAMPLE RAMP DIMENSIONS
NOTE: RE: 16.17/G1.1 FOR RAMP HANDRAIL DETAILS

5 ADA SINGLE RAMP RUN DETAIL
SCALE: 3/8" = 1'-0"

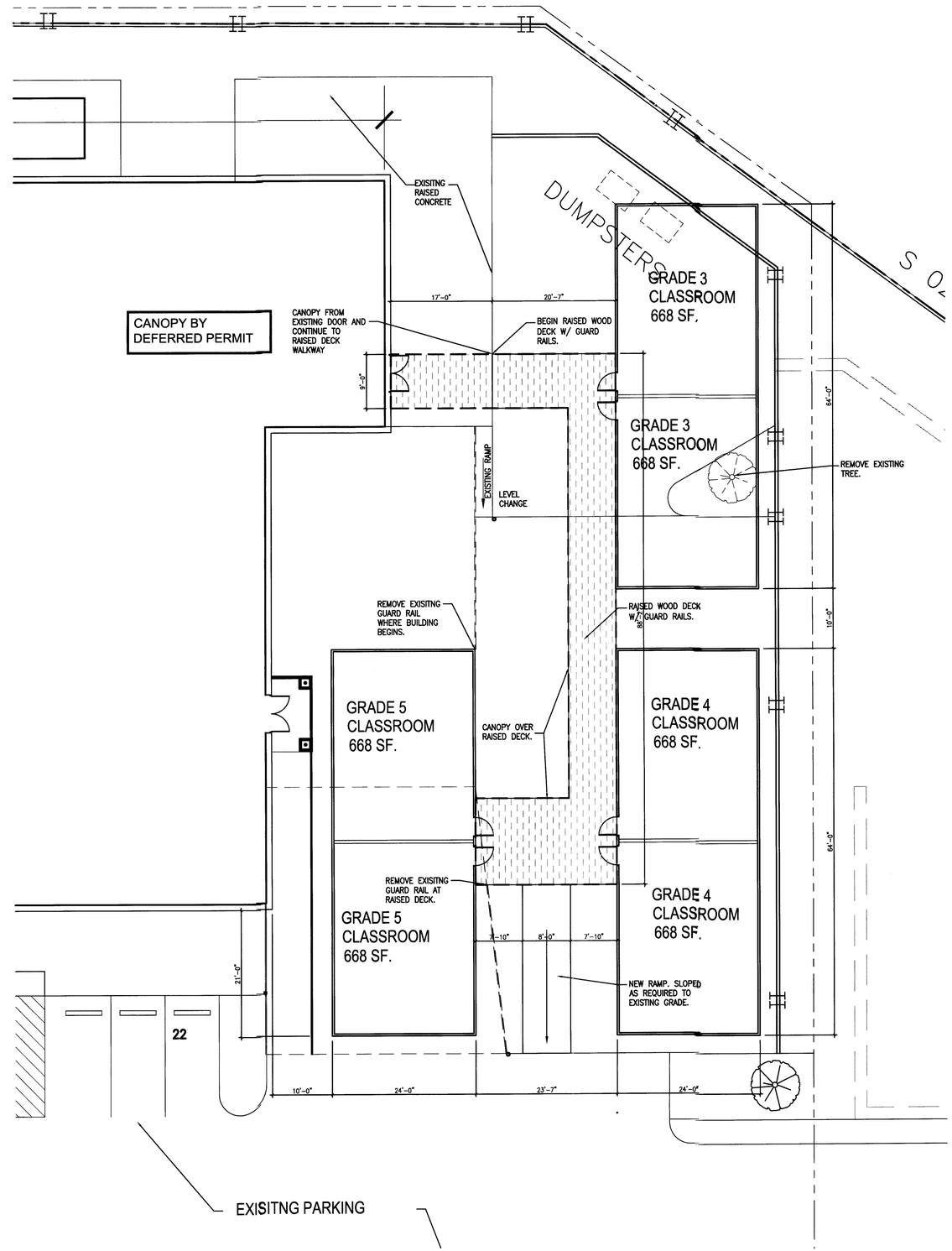

1 PARTIAL SITE PLAN
SCALE: 1" = 10'

© COPYRIGHT 2012 HEIGHTS VENTURE ARCHITECTS, LLP

ISSUE DATES

05-01-13 PERMIT SET

HEIGHTS VENTURE ARCHITECTS, LLP
HOUSTON
1111 North Loop West, Suite 800
Houston, Texas 77008
713 869 1103 V
DALLAS
5717 Legacy Drive, Suite 240
Plano, Texas 75024
972 490 7292 V

HARMONY SCIENCE ACADEMY
2031 S. TEXAS AVENUE
BRYAN, TRXAS 77802
A PROJECT FOR COSMOS FOUNDATION, INC.

PROJECT NO. 12135-200
DATE PLOTTED: 04-30-13
CHECKED BY: SR
DRAWN BY: LL
FILE NAME:

SHEET TITLE
ENLARGED SITE PLAN AND DETAILS

SHEET NUMBER
A1.1