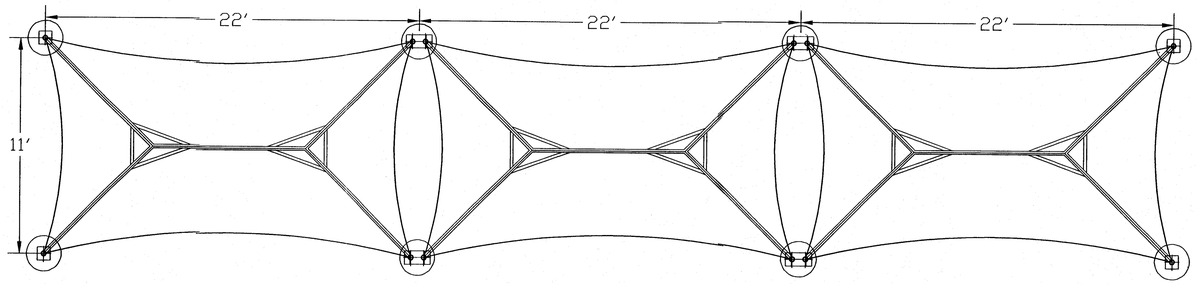

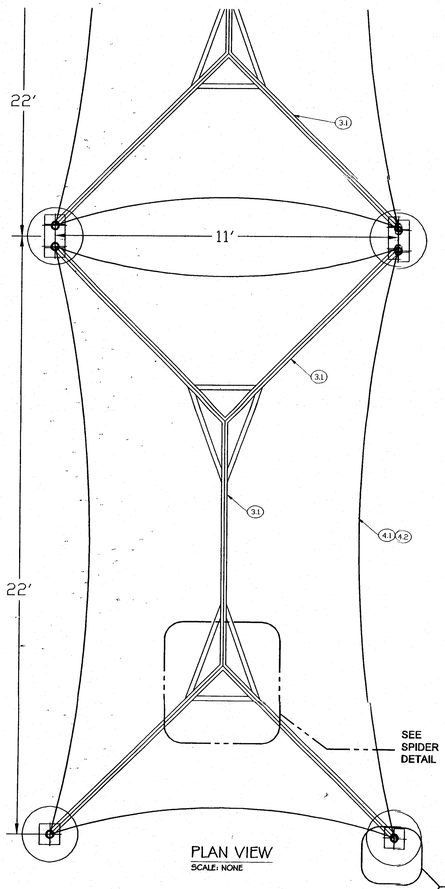

PLAN VIEW
SCALE: NONE

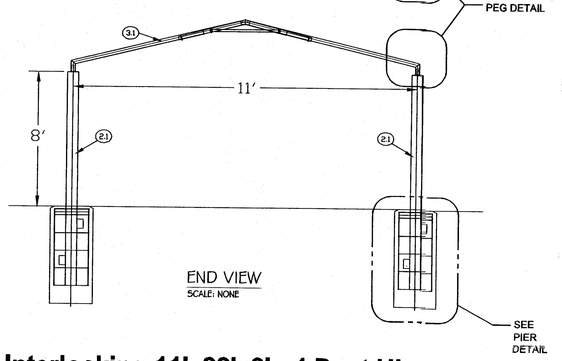

END VIEW
SCALE: NONE

(3) Interlocking 11'x22'x8' - 4 Post Hip

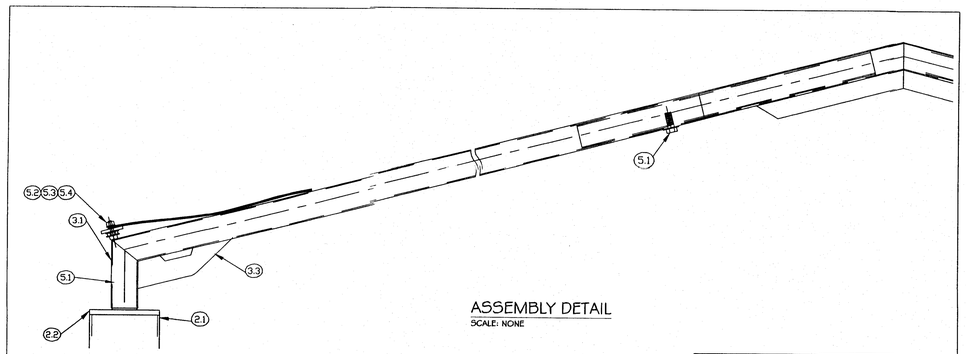

ASSEMBLY DETAIL
SCALE: NONE

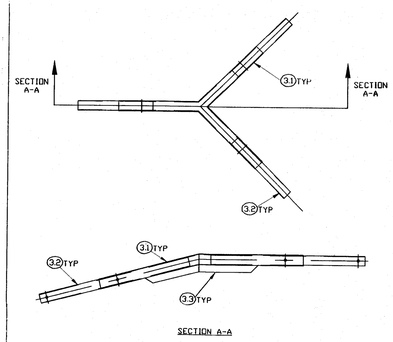

SPIDER DETAIL
SCALE: NONE

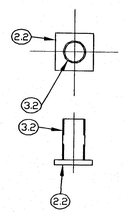

PEG PLATE DETAIL
SCALE: NONE

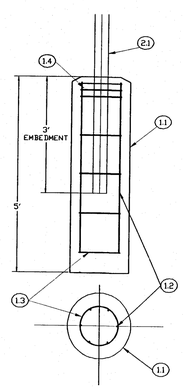

PIER DETAIL (TYP)
SCALE: NONE

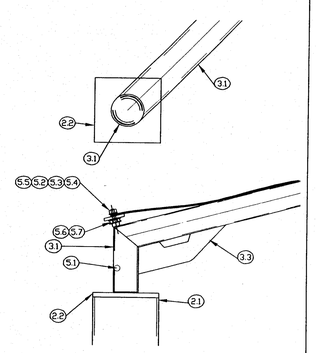

HOOP TO PEG DETAIL
SCALE: NONE

KEY NOTES:

1.1) 18" Diameter concrete pier.
1.2) 6 ea of #6 Vertical bars equally spaced.
1.3) #3 Ties at 12" O.C.
1.4) 3 ea of #3 @ 3" O.C. top.
2.1) 3" x 3" x 3/16" ASTM A500 Grade B Structural Square Tubing.
2.2) 1/2" ASTM A-36 Steel Plate.
3.1) 2.197"Ø - 12 ga. Round Galvanized Tubing.
3.2) 1.90"Ø - 13 ga. Round Galvanized Tubing.
3.3) 1/4" ASTM A-36 Steel Plate.
4.1) 100% Polyethylene Architechtural Mesh Membrane Canopy.
4.2) 1/4" Dia. Galvanized Steel Cable.
4.3) 1/4" Galvanized Cable Clamp.
5.1) 1/2"Ø GR8 Hex Thru-Bolt.
5.2) 1/2" Flat Washer.
5.3) 1/2" Lock Washer.
5.4) 1/2" Hex Nut.
5.5) 1/2"Ø GR8 Hex Bolt.
5.6) 1-1/2" Cable Pully.
5.7) 3" x 1/4" Pully Washer.

THE SEAL APPEARING ON THIS DOCUMENT WAS AUTHORIZED BY ANDRE G. GARNER, P.E. 82641 ON 5-29-2013.

STATE OF TEXAS
ANDRE G. GARNER
82641
LICENSED
PROFESSIONAL ENGINEER

General:

Contractor shall be responsible for the verification and coordination of dimensions and for the proper fit-up of field foundations. Any discrepancies and inconsistencies between actual field conditions and/or dimensions and plan dimensions shall be immediately reported to the Engineer of Record.
Temporary construction means and methods and safety provisions are the sole responsibility of the contractor.
The design and provision of all temporary supports such as guys, braces, false work, cribbing, or any other temporary elements required for the execution of the contract shall be the responsibility of the contractor. Temporary supports shall not result in the overstress or damage of the elements to be braced or any elements used as brace supports.
2009 International Building Code is the basic code document used in the preparation of these structural documents. Additional codes and references are as noted. All structural work shall be in conformance with all local codes, in addition to this basic code document.
All phases of the work shall conform to the minimum standards of the 2009 International Building Code and all other regulating agencies exercising authority over any portion of the work.
The contract structural drawings and specifications represent the finished structure unless otherwise indicated. They do not indicate the method of construction.
All ASTM specifications noted in this drawing shall be of the latest revisions.
In the event certain features of the construction are not fully shown on the drawings or called for in the notes or specifications, their construction shall be of the same character as for similar conditions that are shown or called for and shall be reviewed by the Engineer Of Record.

Structural Design Criteria:

Structural design is based as per IBC2009

Live load (Including Snow): 1607.3	5 PSF.
Roof dead load:	0.5 PSF.
Wind speed (3-second gust):	90 MPH.
Exposure: 1609.4.2	B
Occupancy Category: 1604.5	I
Importance Factor (I):	1.0

Note: Membrane(s) must be removed if snow load is expected to exceed 5 psf and/or wind speed is expected to exceed 90mph

Soil Profile Type / Foundation:

Soil profile type (Section 1615.1.1, IBC2009) "D" whenever the soil encountered appears to vary from the assumed type or expansive soil or local fill is found at the site the engineer of record needs to be contacted before proceeding further with the construction.
Sds .097
Sd1 .063

Concrete:

Concrete design and reinforcement shall be in accordance with "Building Code requirements for structural concrete", ACI 318-05 and with "Details and detailing of Concrete Reinforcement", ACI 315-92.
All Concrete work shall be in accordance with the latest edition of the "Standard Specifications for Structural Concrete", ACI 301.
Cast-In-Place shall be normal weight concrete with design strength of 3,000 PSI at 28 days, a slump between 5 and 7 inches, maximum Water/Cement Ratio of 0.45, and a minimum Cement Content of 520 lb/CY and a maximum Aggregate Size of 1 inch.
Contractor shall be responsible for the adequacy of the forms and shoring and safe practice in their use and removal.
Concrete that has not been placed prior to 1.5 hours after the initial mixing water was added shall not be placed regardless of temperature or slump. Placing of concrete in piers shall be through "Elephant Trunk" tubular chutes located such that the free air drop of the concrete does not exceed 8 feet. Alternate placement methods of concrete shall not be used unless approved by the Engineer.

Concrete Reinforcing:

Reinforcing steel shall be deformed new billet steel bars in accordance with A.S.T.M. specifications A615 Grade 60.
All hooks and bends in reinforcing bars shall conform to ACI detailing standards unless shown otherwise.
The welding of reinforcing steel will not be permitted.
Reinforcing steel clear cover shall be as follows:
A. Drilled Piers: 3" Bottom, 3" Sides.

Drilled Piers:

Pier Design is based on an assumed allowable loading of 1,500 PSF in end bearing and 500 PSF in side friction.
Reinforcing cage shall be held securely away from earth at sides and bottom by sets of 3 precast concrete spacer blocks at a maximum spacing of 8ft. along the length of the cage and 1'-0" from bottom unless shown otherwise.
Pier reinforcing and concrete shall be placed immediately after drilling operations are complete; in no case shall a pier be drilled that cannot be poured by the end of the workday.
Precautions should be taken during the placement of reinforcement and concrete to prevent the loose material from falling into the excavation.
Prior to the placement of concrete, water should be removed from the pier excavation.
The Contractor shall verify depths of piers before steel is cut. Pier steel may be delivered to the jobsite in standard lengths and cut as required. Provide 64 bar diameter laps in all vertical pier reinforcing.

Structural Steel:

Rolled steel plates, shapes, and bars shall be structural quality carbon steel complying with ASTM A-36, except where other type steel is shown.
Structural steel tubular products shall be cold formed structural quality carbon steel, welded or seamless, complying with ASTM A500, Grade B.
Pipe columns shall conform to the requirements of ASTM A-500 Grade B (Unless noted otherwise on the Plans).
All structural steel shall be fabricated and erected in accordance with the drawings and as recommended by AISC Manual of Steel Construction.
Steel telescoped sleeves do not have more than 1/16" tolerance, with no less than 12" overlap at all sleeves. All internal fittings are plug welded on two sides.
Steel tubing and plates are finished with a minimum of 2.5 to 3.5 MIL thick UV-inhibited weather resistant powder coat. Where size of structure or determined loads require larger structural steel members or steel greater than 7 gauge thickness, carbon steel may be substituted. Cleaning and coating of carbon steel conforms to the following:
A de-greasing agent is applied to remove surface oil and grease.
An acid-phosphate wash be applied to etch and prepare the surface for powder-coating, where wall thickness requires pre-heating.
Steel members are to be pre-heated prior to powder coat application to assure adhesion.
Welding shall be in accordance with the drawings and as recommended by applicable AWS specifications. Welding Rods to be low hydrogen type E70 or gas-metal arc using ER 7053 wire.
Welds have been designed with single pass fillet welds. All steel shall be welded shut at terminations to prevent water inclusion inside structural members. Welders shall be certified in accordance with the latest edition of the American Welding Society specifications and qualifications.
All welding will be shop welded, field connections will be bolted.
Bolted connections have been designed to be tightened according to the turn-of-the-nut method.
Bolts, nuts, washers, lags and screws shall be medium carbon steel: size and type to suit applications; zinc plated for exterior locations.
Stranded cable with zinc coatings, class A, minimum tensile strength equal 7000 LBS.

Membrane Top (Canopy):

Membrane cover shall be fabricated with UV resistant 100% High Density Polyethylene, flame-resistant Architectural Mesh. Meets ASTM -E-84 (Class A Fire Rating) where required. Membrane canopy should be stretched and tensioned by applying axial tension to the canopy perimeter cable as required to achieve structural integrity of the membrane and reduce fluttering and vibrations under wind load. Sag on tensioned perimeter cables should be between 3 and 3.5% of cable chord.

Confidential Proprietary Information:
The information contained herein is proprietary to Modern Shade LLC and shall not be reproduced or disclosed in whole or in part, or used for any design or manufacture except when user obtains direct written authorization from Modern Shade LLC.

Garner Consulting Group
100 Commons Rd.
Suite 7, PMB 302
Dripping Springs, Texas 78620
512.415.5488
Firm Number: F-8853

Revision	Description	Date	
6			
5			
4			
3			
2	REVISED AND RESUBMITTED	5/29/13	KB
1	FOR APPROVAL	5/7/13	KB
0			

modern shade LLC

City of Bryan
Bryan Aquatic Center Pool Deck
Shade
3100 Oakridge Drive
Bryan, TX 77802

MS-13046
PROJECT

S1
SHEET