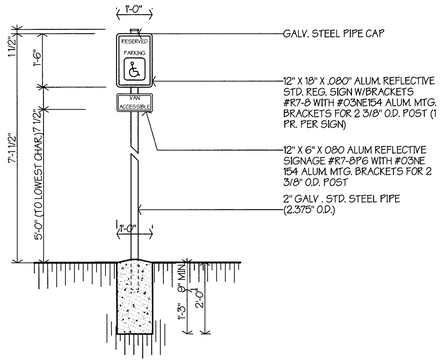

HANDICAP SIGNAGE

NO SCALE (20)

PARKING ANALYSIS: PHASE TWO

GROSS FLOOR AREA	3,017 SF
REQUIRED PARKING (1.25 SPACE PER 100 GFA)	30 SPACES
TOTAL SPACES REQUIRED	30 SPACES
SHANNONS SPACES PROVIDED (17 SPACES & 2 HANDICAP)	19 SPACES
OFF-SITE SPACES PROVIDED (MT. VERNON BAPTIST CHURCH)	25 SPACES
TOTAL SPACES PROVIDED	44 SPACES

LEGAL DESCRIPTION: ADAMS, GEORGE A
CITY OF BRYAN
BLOCK C, LOTS 10 & 9 & LT 2
BK 6 BRYANS 3RD
ZONED: COMMERCIAL

SITE IS NOT WITHIN 100 YR. FLOOD PLAIN - FIRM PANEL #:

LANDSCAPE ANALYSIS: PHASE TWO

AREA OF (EXIST.) BUILDINGS	1,127 SF
AREA OF (NEW) BUILDING	1,890 SF
AREA OF (NEW) PARKING AND PAVED SURFACES	11,367 SF
TOTAL DEVELOPED AREA	14,384 SF
REQUIRED LANDSCAPE SQUARE FOOTAGE (14,384 SF X 15%)	2,158 SF
NEW PLANTED CANOPY TREES (LIVE OAKS) (9 X 200 SF)	1,800 SF
NEW PLANTED SHRUBS (2-15 GALLON = 10 SF) (7X 10 SF)	70 SF
NEW GRASS/ GROUND COVER (14,384 SF / 100) OR (2,158 X 15%)	324 SF
TOTAL LANDSCAPE SQUARE FOOTAGE PROVIDED	2,194 SF

PROJECT DATA

NO SCALE (16)

- NEW CONCRETE SIDEWALK SCORED JOINTS - EVENLY SPACED @ 5'-0" MAX. EXPANSION JOINTS @ 30'-0" o.c. MAX.
- NEW CONCRETE PAVING (PHASE ONE)
- NEW CONCRETE PAVING (PHASE TWO)
- NEW CONCRETE SIDEWALK
- PROPERTY LINE
- OH — EXISTING OVERHEAD POWER LINE
- E — EXISTING ELECTICAL LINE
- PE — PROPOSED ELECTICAL LINE
- W — EXISTING WATER LINE
- PW — PROPOSED NEW 4" WATER LINE
- SS — EXISTING SANITARY SEWER
- PSS — PROPOSED NEW 4" SANITARY SEWER
- G — EXISTING GAS LINE
- PG — PROPOSED NEW 1" GAS LINE
- EXISTING CHAIN LINK FENCE TO REMAIN
- PP POWER POLE
- LP LIGHT POLE
- W WATER METER
- FH FIRE HYDRANT
- G GAS METER
- EB EXISTING BOLLARD TO REMAIN
- NB NEW BOLLARD, REF. 19/A1.1
- E EXISTING
- N NEW
- P PROPOSED
- NEW PLANTED CANOPY TREE (LIVE OAK 1 1/2")
- NEW PLANTED SHRUB (2-15 GALLONS)

SITE LEGEND

NO SCALE (12)

1. REMOVE ALL EXISTING TREES, CONSTRUCTION, OR OTHER OBSTRUCTIONS THAT WILL INTERFERE WITH CONSTRUCTION. VERIFY WITH OWNER OR ARCHITECT AT SITE.
2. PROTECT ALL EXISTING CONSTRUCTION TO REMAIN FROM DAMAGE DURING CONSTRUCTION (I.E. BUILDINGS, PAVING, WALKS, STREETS, FENCES, ETC.)
3. PROTECT FROM DAMAGE ALL EXISTING TREES THAT ARE TO REMAIN DURING CONSTRUCTION. MAINTAIN BARRIERS AROUND TREES AT A DISTANCE OF THE DRIPLINE PLUS 5'-0" BEYOND.
4. REFER TO SITE PLAN FOR APPROXIMATE LOCATION OF ALL KNOWN UTILITIES. VERIFY LOCATIONS OF ALL WATER, POWER, SANITARY SEWER, STORM SEWER, GAS, ETC. PROTECT AND MARK APPROPRIATELY PRIOR TO BEGINNING ANY EXCAVATION, NEW CONSTRUCTION OR OTHER WORK AT THE SITE.
5. GENERAL CONTRACTOR SHALL BE RESPONSIBLE FOR VERIFYING ALL DIMENSIONS DURING LAYOUT AT THE SITE AND SHALL CONTACT THE ARCHITECT SHOULD ANY PROBLEM BECOME EVIDENT.
6. AREAS TO BE SEEDED INCLUDE ALL AREAS WHERE GRADING IS REQUIRED OR WHERE GRASS IS DISTURBED. DISTURBED AREAS SHALL BE RESTORED TO ORIGINAL CONDITION. (PULVERIZE TOP SOIL, FINE GRADE, AND RAKE FOR PLANTING).
7. THE CONTRACTOR SHALL NOTIFY THE CITY ENGINEERING DIVISION FORTY-EIGHT (48) HOURS IN ADVANCE OF ANY CONSTRUCTION IN CITY RIGHT-OF-WAY AND/OR PUBLIC UTILITY EASEMENT.
8. DURING CONSTRUCTION, THE GENERAL CONTRACTOR SHALL MAKE PROVISIONS FOR THE POTENTIAL EROSION OF SOIL FROM THE SITE THROUGH THE USE OF HAY BALES OR SILT FENCES STRATEGICALLY PLACED AROUND THE PROPERTY AND AT EXISTING STORM DRAIN INLETS ADJACENT TO NEW CONSTRUCTION. THE GENERAL CONTRACTOR SHALL OBTAIN FINAL APPROVAL OF THE ACTUAL METHOD REQUIRED AND ITS PLACEMENT FROM THE CITY ENGINEERING DIVISION PRIOR TO BEGINNING ANY SITEWORK.
9. ACCESSIBLE ROUTES SHALL NOT EXCEED 5% SLOPE (1:20) IN THE DIRECTION OF TRAVEL. CROSS-SLOPE NOT TO EXCEED 2% (1:50).

SITE NOTES

NO SCALE (8)

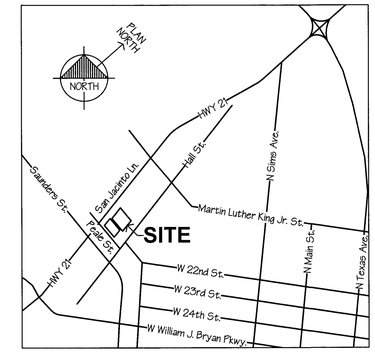

VICINITY MAP

NO SCALE (4)

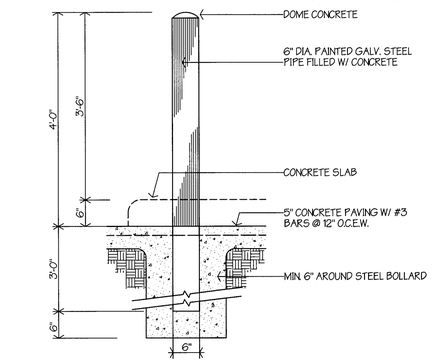

BOLLARD DETAIL

3/4"=1'-0" (19)

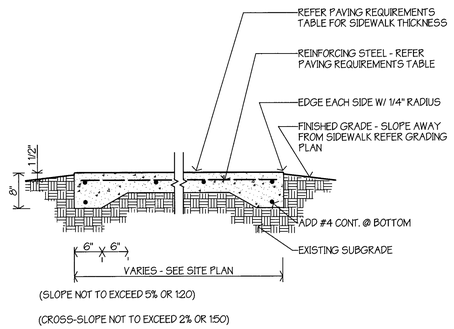

(SLOPE NOT TO EXCEED 5% OR 1:20)

(CROSS-SLOPE NOT TO EXCEED 2% OR 1:50)

TYPICAL SIDEWALK

3/4"=1'-0" (15)

PAVING REQUIREMENTS*					
LOCATION	THK.	REINF.	PSI	BASE.	SUB-BASE
SIDEWALKS	4"	#3 @ 12" O.C.E.W.	3000	6" COMP. FILL	EXIST. EARTH
PARKING	5"	#3 @ 12" O.C.E.W.	3000	6" COMP. FILL	EXIST. EARTH
DRIVES	5"	#3 @ 12" O.C.E.W.	3000	6" COMP. FILL	EXIST. EARTH
MEP PADS	5"	#3 @ 12" O.C.E.W.	3000	6" COMP. FILL	EXIST. EARTH

1. AT ALL PAVING, REMOVE TOPSOIL, VEGETATION, & ROOTS. CUT OR ADD FILL AS REQD.
2. ALL FILL SHALL BE SELECT AS SPECIFIED. LACKING SPECIFICATIONS, MAX. P.I. = 20.
3. ALL BASE MATERIAL SHALL BE COMPACTED AS SPECIFIED. LACKING SPECS, COMPACT TO 95% STANDARD PROCTOR IN MAX. 6" LIFTS.
4. ALL FILL BELOW PAVING SHALL BE COMPACTED AS SPECIFIED. LACKING SPECS, COMPACT TO 95% STANDARD PROCTOR IN MAX. 6" LIFTS.
5. ALL FILL NOT BELOW PAVING OR FOUNDATION SHALL BE COMPACTED AS SPECIFIED. LACKING SPECS, COMPACT TO 90% STANDARD.

PAVING REQUIREMENTS

NO SCALE (11)

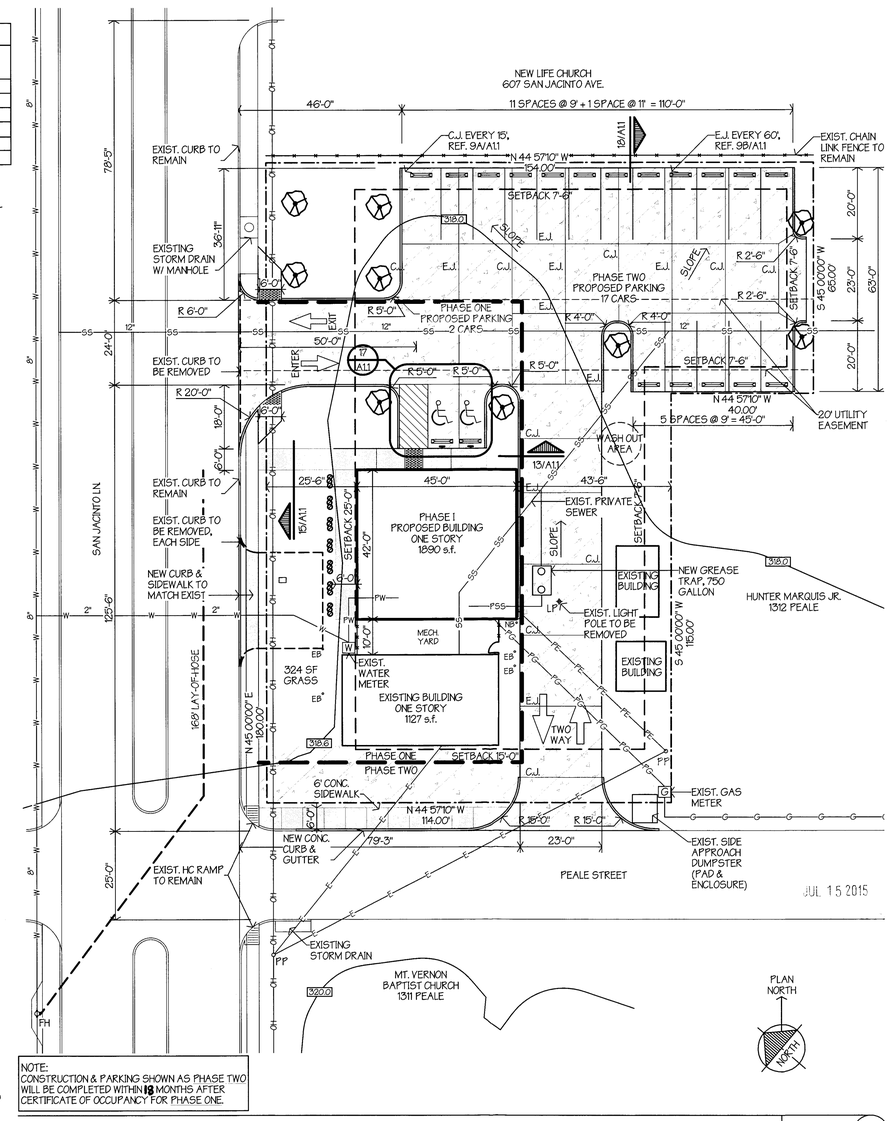

NOTE:
CONSTRUCTION & PARKING SHOWN AS PHASE TWO WILL BE COMPLETED WITHIN 18 MONTHS AFTER CERTIFICATE OF OCCUPANCY FOR PHASE ONE.

SITE PLAN

1"=20'-0" (1)

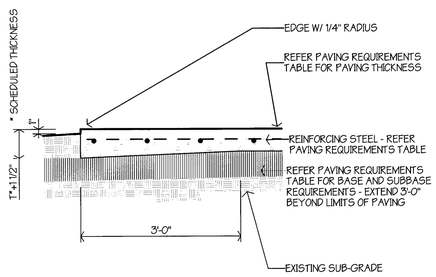

PAVING EDGE

3/4"=1'-0" (18)

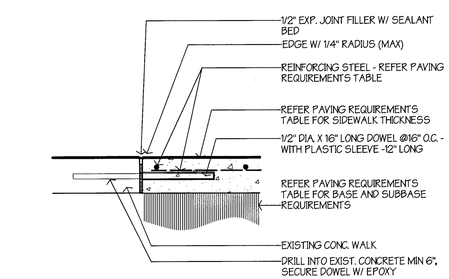

NEW SIDEWALK TO EXIST.

1 1/2"=1'-0" (14)

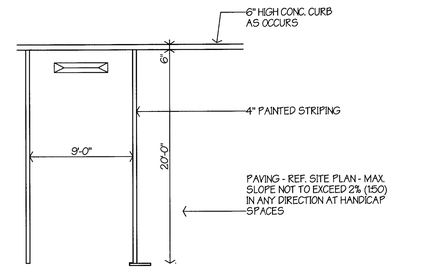

TYPICAL PARKING SPACE

NO SCALE (10)

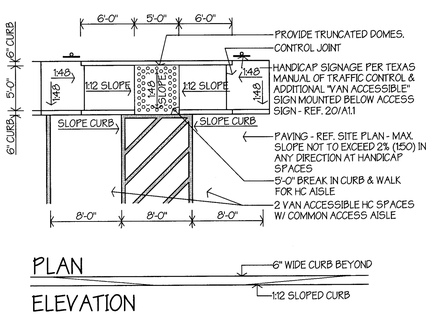

HC ACCESS AT PARKING

SCALE (17)

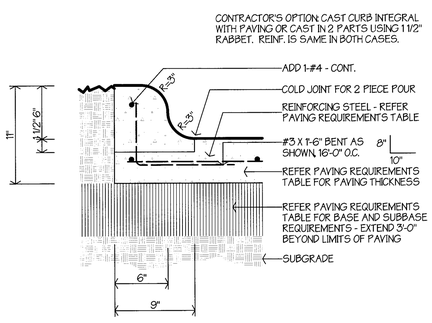

TYPICAL CONC. CURB

1 1/2"=1'-0" (13)

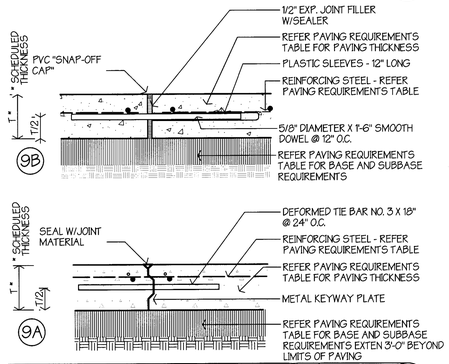

CONCRETE JOINT

1 1/2"=1'-0" (9)

PATTERSON ARCHITECTS
making a difference by Design
www.patarch.com
701 South Texas Avenue
Bryan, Texas 77803
979.775.6036
design@patarch.com

M.E.P.

STRUCTURAL

CIVIL AND SURVEY

FRED A. PATTERSON
REGISTRATION NUMBER: 10389

THESE DOCUMENTS ARE FOR INTERIM REVIEW AND ARE NOT INTENDED FOR REGULATORY APPROVAL, BIDDING, PERMIT, OR CONSTRUCTION PURPOSES.

Shannon's Catering
NEW RESTAURANT BUILDING
601 SAN JACINTO LN.
BRYAN, TX

Not Date:	Issue Notes:
6/9/15	SITE REVIEW
7/1/15	SITE REVIEW
7/15/15	SITE REVIEW

Drawn By:	JMH
Checked By:	FP
Patterson Project No.:	1523
Building Inventory No.:	
Plot Date:	Jul 15, 2015
CAD File:	A1.1 Site Plan 1523.vwx
Project No.:	
Sheet Title:	SITE PLAN

Sheet
A1.1
1 of 1