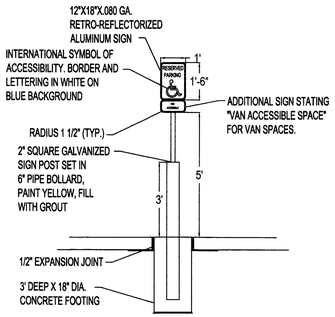

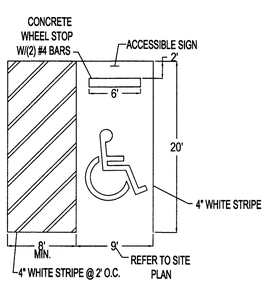

PARKING SIGNAGE DETAIL

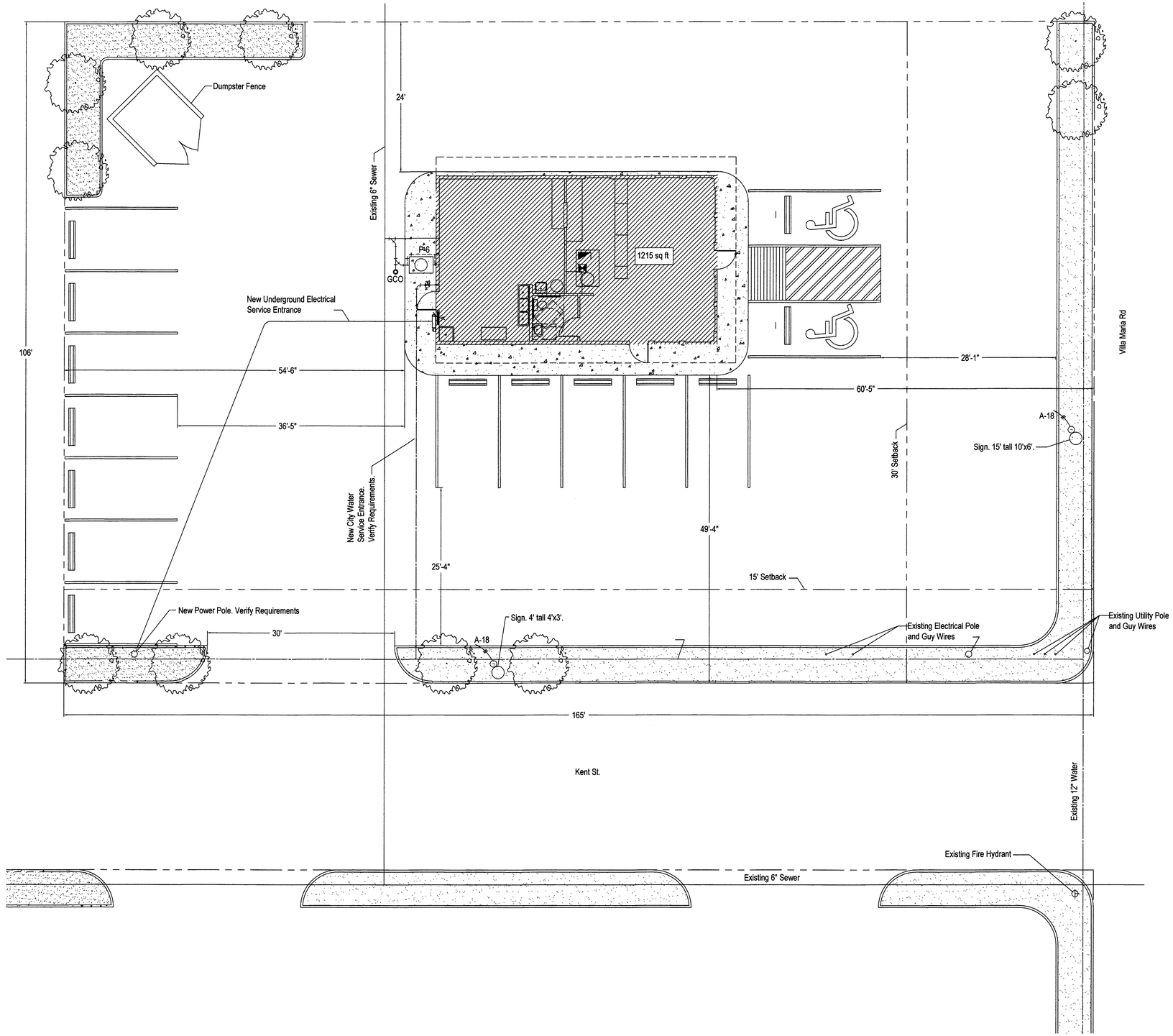

SITE PLAN

SCALE: 1/8" = 1'-0"

Development Services
JUL 12 2016
RECEIVED

Jack n Jill

Villa Maria Rd

Bryan, Texas

MCH Engineering LLC
Registration # F-9036
9302 Brandon Ln. Miles, Texas 76861
325.656.5569 mcaryhouston@gmail.com

SEAL

REVISION

DRAWN BY: CAE	CHECKED BY: MCH
ORIG. DATE: 7 June 2016	REV. DATE:
ISSUED FOR	SHEET NO. A-1
SCALE: noted	