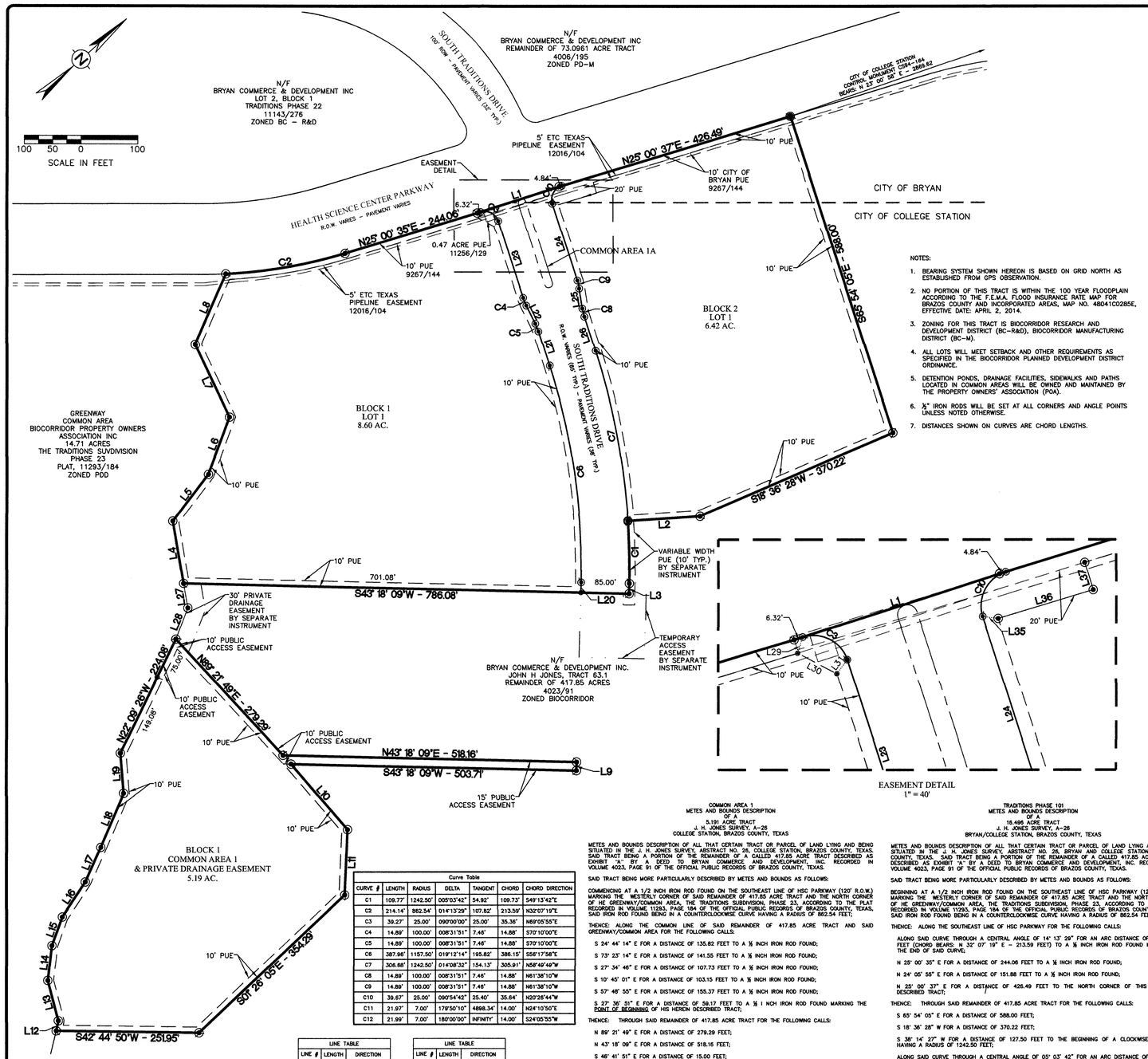

NOTES:

1. BEARING SYSTEM SHOWN HEREON IS BASED ON GRID NORTH AS ESTABLISHED FROM GPS OBSERVATION.
2. NO PORTION OF THIS TRACT IS WITHIN THE 100 YEAR FLOODPLAIN ACCORDING TO THE F.E.M.A. FLOOD INSURANCE RATE MAP FOR BRAZOS COUNTY AND INCORPORATED AREAS, MAP NO. 48041C0285E, EFFECTIVE DATE: APRIL 2, 2014.
3. ZONING FOR THIS TRACT IS BIOCORRIDOR RESEARCH AND DEVELOPMENT DISTRICT (BC–R&D), BIOCORRIDOR MANUFACTURING DISTRICT (BC–M).
4. ALL LOTS WILL MEET SETBACK AND OTHER REQUIREMENTS AS SPECIFIED IN THE BIOCORRIDOR PLANNED DEVELOPMENT DISTRICT ORDINANCE.
5. DETENTION PONDS, DRAINAGE FACILITIES, SIDEWALKS AND PATHS LOCATED IN COMMON AREAS WILL BE OWNED AND MAINTAINED BY THE PROPERTY OWNERS' ASSOCIATION (POA).
6. ½" IRON RODS WILL BE SET AT ALL CORNERS AND ANGLE POINTS UNLESS NOTED OTHERWISE.
7. DISTANCES SHOWN ON CURVES ARE CHORD LENGTHS.

CERTIFICATE OF OWNERSHIP AND DEDICATION

STATE OF TEXAS
COUNTY OF BRAZOS

I, W. Spencer Clements, Jr.,, Vice President of Bryan/Traditions, L.P. a Texas Limited Partnership, owner of the 21.687 acre tract shown on this plat, and designated herein as the Traditions Subdivision Phase 101, to the City of College Station & City of Bryan, Texas, and whose name is subscribed hereto, hereby dedicate to the use of the public forever all streets, alleys, parks, greenways, infrastructure, easements and public places thereon shown for the purpose and consideration therein expressed. All such dedications shall be in fee simple unless expressly provided otherwise.

_____
Bryan/Traditions, L.P., By
Traditions Acquisitions Partnership, L.P., its General Partner, By
W. Spencer Clements, Jr., Vice President

STATE OF TEXAS
COUNTY OF BRAZOS

Before me, the undersigned authority, on this day personally appeared W. Spencer Clements, Jr., known to me to be the person whose name is subscribed to the foregoing instrument, and acknowledged to me that he executed the same for the purpose and consideration therein stated.

Given under my hand and seal on this ____ day of _____, 20___.

_____
Notary Public, Brazos County, Texas

CERTIFICATE OF CITY ENGINEER

I, _____, City Engineer of the City of Bryan, Texas, hereby certify that this Subdivision conforms to the requirements of the Subdivision Regulations of the City of Bryan, Texas.

_____
City Engineer

CERTIFICATE OF PLANNING AND ZONING COMISSION

I, _____, Chairman of the Planning and Zoning Commission of the City of Bryan, Texas, hereby certify that the attached plat was duly approved by the Commission on the ____ day of _____, 20___.

_____
Chairman

APPROVAL OF THE CITY PLANNER

I, _____, the undersigned, City Planner and/or designated Secretary of the Planning and Zoning Commission of the City of Bryan, hereby certify that this plat is in compliance with the appropriate codes and ordinances of the City of Bryan and was approved on the ____ day of _____, 20____.

_____
City Planner
Bryan, Texas

CERTIFICATE OF OWNERSHIP AND DEDICATION

STATE OF TEXAS
COUNTY OF BRAZOS

I, _____, Bryan Commerce and Development, owner and developer of the land shown on this plat, and designated herein as the The Traditions Subdivision, Phase 101, to the City of College Station and City of Bryan, Texas, and whose name is subscribed hereto, hereby dedicate to the use of the public forever all streets, alleys, parks, greenways, infrastructure, easements and public places thereon shown for the purpose and consideration therein expressed. All such dedications shall be in fee simple unless expressly provided otherwise.

_____
Bryan Commerce and Development

STATE OF TEXAS
COUNTY OF BRAZOS

Before me, the undersigned authority, on this day personally appeared _____ known to me to be the person whose name is subscribed to the foregoing instrument, and acknowledged to me that he executed the same for the purpose and consideration therein stated.

Given under my hand and seal on this ____ day of _____, 20___.

_____
Notary Public, Brazos County, Texas

CERTIFICATE OF CITY ENGINEER

I, _____, City Engineer of the City of College Station, Texas, hereby certify that this Subdivision conforms to the requirements of the Subdivision Regulations of the City of College Station, Texas.

_____
City Engineer

CERTIFICATE OF PLANNING AND ZONING COMISSION

I, _____, Chairman of the Planning and Zoning Commission of the City of College Station, Texas, hereby certify that the attached plat was duly approved by the Commission on the ____ day of _____, 20___.

_____
Chairman

CERTIFICATE OF THE COUNTY CLERK

STATE OF TEXAS
COUNTY OF BRAZOS

I, _____, County Clerk, in and for said county, do hereby certify that this plat together with its certificates of authentication was filed for record in my office the ____ day of _____, 20____, in the Deed Records of Brazos County, Texas, in Volume _____ Page _____.

WITNESS my hand and official Seal, at my office in Bryan, Texas.

_____
County Clerk
Brazos County, Texas

CERTIFICATE OF THE SURVEYOR

STATE OF TEXAS
COUNTY OF BRAZOS

I, Brad Kerr, Registered Professional Land Surveyor No. 4502, in the State of Texas, hereby certify that this plat is true and correct and was prepared from an actual survey of the property and that the property markers and monuments were placed under my supervision on the ground.

_____, R.P.L.S. No. 4502

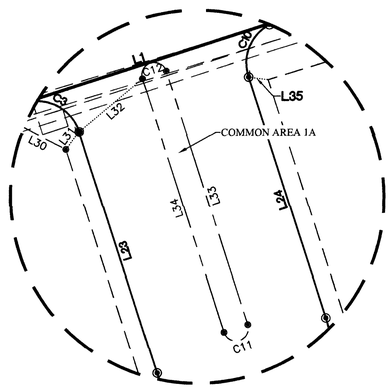

COMMON AREA 1A DETAIL
1" = 40'

VICINITY MAP

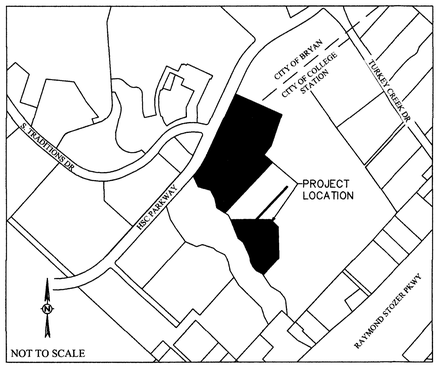

NOT TO SCALE

Curve Table						
CURVE #	LENGTH	RADIUS	DELTA	TANGENT	CHORD	CHORD DIRECTION
C1	109.77'	1242.50'	005°03'42"	54.92'	109.73'	S49°13'42"E
C2	214.14'	862.54'	014°13'29"	107.82'	213.59'	N32°07'19"E
C3	39.27'	25.00'	090°00'00"	25.00'	35.36'	N69°05'55"E
C4	14.89'	100.00'	008°31'51"	7.46'	14.88'	S70°10'00"E
C5	14.89'	100.00'	008°31'51"	7.46'	14.88'	S70°10'00"E
C6	387.96'	1157.50'	019°12'14"	195.82'	386.15'	S56°17'58"E
C7	306.88'	1242.50'	014°08'32"	154.13'	305.91'	N58°49'49"W
C8	14.89'	100.00'	008°31'51"	7.46'	14.88'	N61°38'10"W
C9	14.89'	100.00'	008°31'51"	7.46'	14.88'	N61°38'10"W
C10	39.67'	25.00'	090°54'42"	25.40'	35.64'	N20°26'44"W
C11	21.97'	7.00'	179°50'10"	4898.34'	14.00'	N24°10'50"E
C12	21.99'	7.00'	180°00'00"	INFINITY	14.00'	S24°05'55"W

LINE TABLE		
LINE #	LENGTH	DIRECTION
L1	151.88'	N24° 05' 55"E
L2	127.50'	S38° 14' 27"W
L3	18.13'	S46° 41' 51"E
L4	111.48'	N57° 48' 55"W
L5	103.15'	N10° 45' 01"W
L6	107.73'	N27° 34' 46"W
L7	141.55'	N73° 23' 14"W
L8	130.82'	N24° 44' 14"W
L9	15.00'	S46° 41' 51"E
L10	152.33'	S88° 38' 33"E
L11	115.24'	S45° 43' 02"E
L12	18.39'	N34° 48' 30"W
L13	73.58'	N62° 38' 47"W
L14	61.80'	N41° 33' 23"W
L15	53.67'	N28° 08' 21"W
L16	74.18'	N14° 31' 20"W
L17	66.77'	N24° 05' 23"W
L18	103.72'	N24° 57' 20"W
L19	70.97'	N52° 35' 28"W

LINE TABLE		
LINE #	LENGTH	DIRECTION
L20	18.13'	S46° 41' 51"E
L21	63.02'	S65° 54' 05"E
L22	35.64'	S74° 25' 58"E
L23	142.54'	S65° 54' 05"E
L24	142.47'	N65° 54' 05"W
L25	35.64'	N57° 22' 14"W
L26	63.02'	N65° 54' 05"W
L27	43.89'	N57° 48' 55"W
L28	59.17'	N27° 36' 51"W
L29	12.14'	N31° 19' 09"W
L30	31.20'	N69° 33' 15"E
L31	12.34'	N11° 46' 28"W
L32	46.42'	N1° 57' 12"E
L33	150.13'	N65° 54' 05"W
L34	150.11'	S65° 54' 05"E
L35	11.08'	S49° 33' 44"W
L36	70.08'	N25° 00' 37"E
L37	20.00'	N64° 59' 23"W

COMMON AREA 1
METES AND BOUNDS DESCRIPTION
OF A
5.191 ACRE TRACT
J. H. JONES SURVEY, A–26
COLLEGE STATION, BRAZOS COUNTY, TEXAS

METES AND BOUNDS DESCRIPTION OF ALL THAT CERTAIN TRACT OR PARCEL OF LAND LYING AND BEING SITUATED IN THE J. H. JONES SURVEY, ABSTRACT NO. 26, COLLEGE STATION, BRAZOS COUNTY, TEXAS. SAID TRACT BEING A PORTION OF THE REMAINDER OF A CALLED 417.85 ACRE TRACT DESCRIBED AS EXHIBIT "A" BY A DEED TO BRYAN COMMERCE AND DEVELOPMENT, INC. RECORDED IN VOLUME 4023, PAGE 91 OF THE OFFICIAL PUBLIC RECORDS OF BRAZOS COUNTY, TEXAS.

SAID TRACT BEING MORE PARTICULARLY DESCRIBED BY METES AND BOUNDS AS FOLLOWS:

COMMENCING AT A 1/2 INCH IRON ROD FOUND ON THE SOUTHEAST LINE OF HSC PARKWAY (120' R.O.W.) MARKING THE WESTERLY CORNER OF SAID REMAINDER OF 417.85 ACRE TRACT AND THE NORTH CORNER OF HE GREENWAY/COMMON AREA, THE TRADITIONS SUBDIVISION, PHASE 23, ACCORDING TO THE PLAT RECORDED IN VOLUME 11293, PAGE 184 OF THE OFFICIAL PUBLIC RECORDS OF BRAZOS COUNTY, TEXAS, SAID IRON ROD FOUND BEING IN A COUNTERCLOCKWISE CURVE HAVING A RADIUS OF 862.54 FEET;

THENCE: ALONG THE COMMON LINE OF SAID REMAINDER OF 417.85 ACRE TRACT AND SAID GREENWAY/COMMON AREA FOR THE FOLLOWING CALLS:

S 24° 44' 14" E FOR A DISTANCE OF 135.82 FEET TO A ½ INCH IRON ROD FOUND;

S 73° 23' 14" E FOR A DISTANCE OF 141.55 FEET TO A ½ INCH IRON ROD FOUND;

S 27° 34' 46" E FOR A DISTANCE OF 107.73 FEET TO A ½ INCH IRON ROD FOUND;

S 10° 45' 01" E FOR A DISTANCE OF 103.15 FEET TO A ½ INCH IRON ROD FOUND;

S 57° 48' 55" E FOR A DISTANCE OF 155.37 FEET TO A ½ INCH IRON ROD FOUND;

S 27° 36' 51" E FOR A DISTANCE OF 59.17 FEET TO A ¾ I NCH IRON ROD FOUND MARKING THE POINT OF BEGINNING OF HIS HEREIN DESCRIBED TRACT;

THENCE: THROUGH SAID REMAINDER OF 417.85 ACRE TRACT FOR THE FOLLOWING CALLS:

N 89° 21' 49" E FOR A DISTANCE OF 279.29 FEET;

N 43° 18' 09" E FOR A DISTANCE OF 518.16 FEET;

S 46° 41' 51" E FOR A DISTANCE OF 15.00 FEET;

S 43° 18' 09" W FOR A DISTANCE OF 503.71 FEET;

S 88° 38' 33" E FOR A DISTANCE OF 152.23 FEET;

S 45° 43' 02" E FOR A DISTANCE OF 115.24 FEET;

S 01° 26' 05" E FOR A DISTANCE OF 354.29 FEET;

S 42° 44' 50" W FOR A DISTANCE OF 251.95 FEET TO THE COMMON LINE OF SAID REMAINDER OF 417.85 ACE TRACT AND SAID GREENWAY/COMMON AREA;

THENCE: ALONG THE COMMON LINE OF SAID REMAINDER OF 417.85 ACRE TRACT AND SAID GREENWAY/COMMON AREA FOR THE FOLLOWING CALLS:

N 34° 48' 30" W FOR A DISTANCE OF 18.39 FEET TO A ½ INCH IRON ROD FOUND;

N 62° 38' 47" W FOR A DISTANCE OF 73.58 FEET TO A ½ INCH IRON ROD FOUND;

N 41° 33' 23" W FOR A DISTANCE OF 61.80 FEET TO A ½ INCH IRON ROD FOUND;

N 28° 08' 21" W FOR A DISTANCE OF 53.67 FEET TO A ½ INCH IRON ROD FOUND;

N 14° 31' 20" W FOR A DISTANCE OF 74.18 FEET TO A ½ INCH IRON ROD FOUND;

N 24° 05' 23" W FOR A DISTANCE OF 66.77 FEET TO A ½ INCH IRON ROD FOUND;

N 24° 57' 20" W FOR A DISTANCE OF 103.72 FEET TO A ½ INCH IRON ROD FOUND;

N 52° 35' 28" W FOR A DISTANCE OF 70.97 FEET TO A ½ INCH IRON ROD FOUND;

N 22° 09' 25" W FOR A DISTANCE OF 224.08 FEET TO THE POINT OF BEGINNING CONTAINING 5.191 ACRES OF LAND, MORE OF LESS, AS SURVEYED ON THE GROUND FEBRUARY 2016. BEARING SYSTEM SHOWN HEREIN IS BASED ON GRID NORTH AS ESTABLISHED FROM GPS OBSERVATION.

TRADITIONS PHASE 101
METES AND BOUNDS DESCRIPTION
OF A
18.496 ACRE TRACT
J. H. JONES SURVEY, A–26
BRYAN/COLLEGE STATION, BRAZOS COUNTY, TEXAS

METES AND BOUNDS DESCRIPTION OF ALL THAT CERTAIN TRACT OR PARCEL OF LAND LYING AND BEING SITUATED IN THE J. H. JONES SURVEY, ABSTRACT NO. 26, BRYAN AND COLLEGE STATION, BRAZOS COUNTY, TEXAS. SAID TRACT BEING A PORTION OF THE REMAINDER OF A CALLED 417.85 ACRE TRACT DESCRIBED AS EXHIBIT "A" BY A DEED TO BRYAN COMMERCE AND DEVELOPMENT, INC. RECORDED IN VOLUME 4023, PAGE 91 OF THE OFFICIAL PUBLIC RECORDS OF BRAZOS COUNTY, TEXAS.

SAID TRACT BEING MORE PARTICULARLY DESCRIBED BY METES AND BOUNDS AS FOLLOWS:

BEGINNING AT A 1/2 INCH IRON ROD FOUND ON THE SOUTHEAST LINE OF HSC PARKWAY (120' R.O.W.) MARKING THE WESTERLY CORNER OF SAID REMAINDER OF 417.85 ACRE TRACT AND THE NORTH CORNER OF HE GREENWAY/COMMON AREA, THE TRADITIONS SUBDIVISION, PHASE 23, ACCORDING TO THE PLAT RECORDED IN VOLUME 11293, PAGE 184 OF THE OFFICIAL PUBLIC RECORDS OF BRAZOS COUNTY, TEXAS, SAID IRON ROD FOUND BEING IN A COUNTERCLOCKWISE CURVE HAVING A RADIUS OF 862.54 FEET;

THENCE: ALONG THE SOUTHEAST LINE OF HSC PARKWAY FOR THE FOLLOWING CALLS:

ALONG SAID CURVE THROUGH A CENTRAL ANGLE OF 14° 13' 29" FOR AN ARC DISTANCE OF 214.14 FEET (CHORD BEARS: N 32° 07' 19" E – 213.59 FEET) TO A ½ INCH IRON ROD FOUND MARKING THE END OF SAID CURVE;

N 25° 00' 35" E FOR A DISTANCE OF 244.06 FEET TO A ½ INCH IRON ROD FOUND;

N 24° 05' 55" E FOR A DISTANCE OF 151.88 FEET TO A ½ INCH IRON ROD FOUND;

N 25° 00' 37" E FOR A DISTANCE OF 428.49 FEET TO THE NORTH CORNER OF THIS HEREIN DESCRIBED TRACT;

THENCE: THROUGH SAID REMAINDER OF 417.85 ACRE TRACT FOR THE FOLLOWING CALLS:

S 65° 54' 05" E FOR A DISTANCE OF 588.00 FEET;

S 18° 36' 28" W FOR A DISTANCE OF 370.22 FEET;

S 38° 14' 27" W FOR A DISTANCE OF 127.50 FEET TO THE BEGINNING OF A CLOCKWISE CURVE HAVING A RADIUS OF 1242.50 FEET;

ALONG SAID CURVE THROUGH A CENTRAL ANGLE OF 05° 03' 42" FOR AN ARC DISTANCE OF 109.77 FEET (CHORD BEARS: S 49° 13' 42" E – 109.73 FEET) TO THE END OF SAID CURVE;

S 46° 41' 51" E FOR A DISTANCE OF 18.13 FEET;

S 43° 18' 09" W FOR A DISTANCE OF 786.08 FEET TO THE COMMON LINE OF SAID REMAINDER OF 417.85 ACRE TRACT AND SAID GREENWAY/COMMON AREA, THE TRADITIONS SUBDIVISION, PHASE 23;

THENCE: ALONG THE COMMON LINE OF SAID REMAINDER OF 417.85 ACRE TRACT AND SAID GREENWAY/COMMON AREA FOR THE FOLLOWING CALLS:

N 57° 48' 55" W FOR A DISTANCE OF 111.47 FEET TO A ½ INCH IRON ROD FOUND;

N 10° 45' 01" W FOR A DISTANCE OF 103.15 FEET TO A ½ INCH IRON ROD FOUND;

N 27° 34' 46" W FOR A DISTANCE OF 107.73 FEET TO A ½ INCH IRON ROD FOUND;

N 73° 23' 14" W FOR A DISTANCE OF 141.55 FEET TO A ½ INCH IRON ROD FOUND;

N 24° 44' 14" W FOR A DISTANCE OF 135.82 FEET TO THE POINT OF BEGINNING CONTAINING 18.496 ACRES OF LAND, MORE OF LESS, AS SURVEYED ON THE GROUND FEBRUARY 2016. BEARING SYSTEM SHOWN HEREIN IS BASED ON GRID NORTH AS ESTABLISHED FROM GPS OBSERVATION.

LEGEND

- PROPERTY BOUNDARY
- RIGHT OF WAY
- LOT LINE
- PROPOSED PUBLIC UTILITY EASEMENT (P.U.E)
- PROPOSED PRIVATE DRAINAGE EASEMENT
- EXISTING PUBLIC UTILITY EASEMENT (P.U.E)
- EXISTING PUBLIC DRAINAGE EASEMENT (P.D.E)
- EXISTING PUBLIC ACCESS EASEMENT (P.A.E.)
- PROPERTY CORNER

FINAL PLAT
THE TRADITIONS SUBDIVISION
PHASE 101
21.687 ACRES

J.H. JONES SURVEY ; A-26
COLLEGE STATION, BRAZOS COUNTY, TEXAS
2 LOTS

LOT 1, COMMON AREA 1, AND COMMON AREA 1A, BLOCK 1
LOT 1, BLOCK 2

SCALE 1" = 100'
SEPTEMBER 2016

OWNER:
BRYAN COMMERCE & DEVELOPMENT, INC.
P.O BOX 1500
BRYAN, TEXAS 77805

DEVELOPER:
BRYAN TRADITIONS, LP
2100 TRADITIONS BLVD.
BRYAN, TEXAS 77807

SURVEYOR:
Brad Kerr, RPLS No. 4502
Kerr Surveying, LLC
409 N. Texas Ave.
Bryan, TX 77803
(979) 268-3195

ENGINEER:
Schultz Engineering, LLC
TBPE NO. 12327
911 SOUTHWEST PKWY E.
College Station, Texas 77840
***
(979) 764-3900