GOVERNING SPECIFICATIONS
BRYAN/COLLEGE STATION 2012 UNIFIED DESIGN GUIDELINES, MANUALS,TECHNICAL SPECIFICATIONS, & STANDARD CONSTRUCTION DETAILS

CITY OF BRYAN REFERENCE SPECIFICATIONS
ALL APPLICABLE SUBSECTIONS WITHIN:

SECTION I	WATER
SECTION II	WASTEWATER
SECTION III	DRAINAGE
SECTION IV	SITE
SECTION V	STREETS
SECTION VI	ENVIRONMENTAL
SECTION VII	TRAFFIC
SECTION VIII	MISCELLANOUS

SITE PLANS
FOR
SHULMAN INDUSTRIAL PARK
(PHASE ONE)

LOT 1, BLOCK 1 (34.19 ACRES)
JOHN AUSTIN SURVEY, A-62
BRYAN, BRAZOS COUNTY, TEXAS
SEPTEMBER, 2016

PROJECT LOCATION MAP

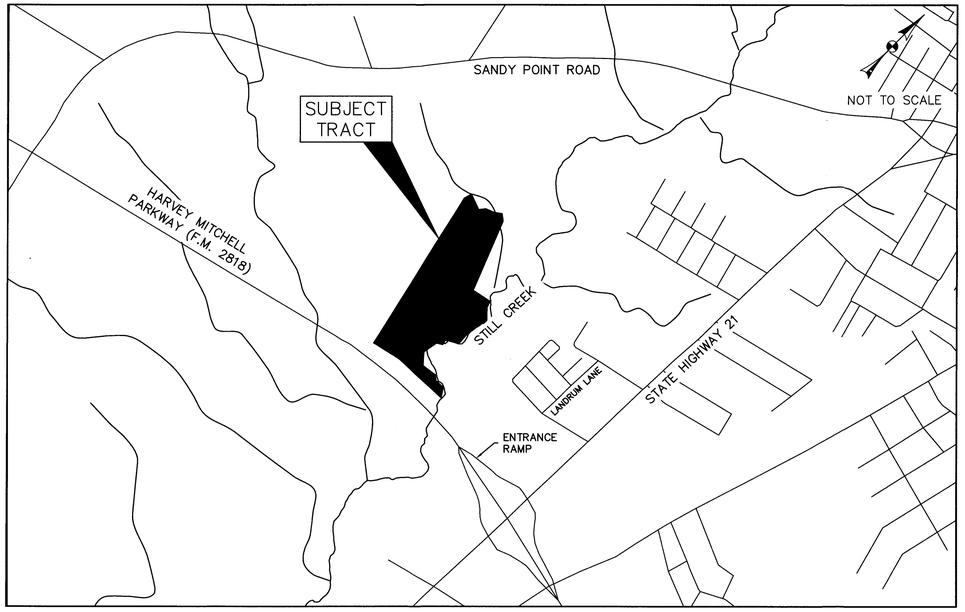

INDEX OF SHEETS

SHEET	TITLE	#
	CIVIL SITE PLAN COVER PAGE	1
C1.0	OVERALL SITE/SUBDIVISION PLAN	2
C1.1	SITE PLAN	3
C2.1	EROSION CONTROL PLAN	4
C3.1	GRADING PLAN	5
C4.1	LANDSCAPE PLAN	6
C5.1	DECELERATION LANE AND DRIVEWAY PLAN	7
C5.2	DECELERATION LANE AND DRIVEWAY DETAILS	8
C6.1	NOTES AND DETAILS	9
C6.2	WATERLINE PLAN/PROFILE	10

THIS DOCUMENT IS RELEASED UNDER THE AUTHORITY OF ALFRED A. PAINE, P.E. 97221 ON 9/7/2016 FOR THE PURPOSE OF INTERIM REVIEW. –NOT FOR CONSTRUCTION–

OWNER & DEVELOPED BY:
CAMPING MAXX
6102 PINTO RUN
COLLEGE STATION, TEXAS 77845
(979) 485-2222

ENGINEER:
DON DURDEN, INC
d.b.a. CIVIL ENGINEERING CONSULTANTS
4101 S. TEXAS AVE, SUITE A
BRYAN, TEXAS 77802
TEL: (979) 846-6212
FAX: (979) 846-8252
REGISTRATION #F-2214
SAN ANTONIO / LAREDO
BRYAN / COLLEGE STATION

SCALE: 1"=100'

TEXAS COMMERCIAL SUBDIVISION
LOT 1, BLOCK 1
34.775 ACRES
VOL. 8038, PG. 117
PLATTED

CURRENT ZONING: PD-I
PLANNED DEVELOPMENT-INDUSTRIAL

SHULMAN INDUSTRIAL PARK
LOT 1, BLOCK 1
34.19 ACRES
ZONING : PD - I
PLANNED DEVELOPMENT - INDUSTRIAL

CALLED 34.031 ACRES
VOL. 11661, PG. 41

ORTIZ SUBDIVISION
VOL. 2449, PG. 335
PLATTED
CURRENT ZONING: A/O
AGRICULTURAL-OPEN

LOT 1
19.93 ACRES

LOT 2
13.82 ACRES

LOT 1, BLOCK ONE
96.26 ACRES

BRAZOS COUNTY COMPLEX
PHASE TWO
VOL. 2306, PG. 271
PLATTED

CURRENT ZONING: A/O
AGRICULTURAL/OPEN

JOHN BOEGNER, et ux
CALLED 19.000 ACRES
VOL. 10074, PG. 175
UNPLATTED

CITY OF BRYAN
CALLED 32.3 ACRES
VOL. 38, PG. 07
UNPLATTED

NORTH HARVEY MITCHELL PARKWAY
(FM 2818)~R.O.W. VARIES

TRIBUTARY TO
STILL CREEK

STILL CREEK

FLOODWAY

100 YEAR
FLOODPLAIN

EXISTING DRIVEWAY

STRIPED MEDIAN

GRASSED MEDIAN

PROPOSED DRIVEWAY

PROPOSED DECEL LANE

EXISTING F.M. 2818 DECEL LANE

R.O.W. LINE

LONE STAR GAS COMPANY
25' WIDE EASEMENT
VOL. 327, PG. 549

LONE STAR GAS COMPANY
(NOW ATMOS GAS)
25' WIDE EASEMENT
VOL. 327, PG. 549

20' CITY OF COLLEGE STATION
WATER WELL EASEMENT
VOL. 8038, PG. 117
PLATTED

PRIVATE DRAINAGE EASEMENT
VOL. 8038, PG. 117
PLATTED

CONCRETE
DRAINAGE
STRUCTURE

EXISTING TXDOT
DRAINAGE
STRUCTURE

PROPOSED
1 STORY
BUILDING
11,900 SF

PROPOSED
1 STORY
BUILDING
11,900 SF

FUTURE 1 STORY
BUILDING
5,950 SF

PROPOSED 32' WIDE
PRIVATE DRAINAGE EASEMENT

SSMH FL IN = 275.08

FL OUT = 286.00

1831 LF SANITARY SEWER @ 0.6%

FUTURE 35'
WIDE PUBLIC UTILITY EASEMENT

FUTURE
SANITARY
SEWER LINE

FUTURE 35' WIDE
PUBLIC UTILITY
EASEMENT

FUTURE WATER
LINE

FUTURE WATER
LINE

FUTURE 15' WIDE
PUBLIC UTILITY
EASEMENT

7.5' SIDE SETBACK
PER ZONING ORDINANCE

7.5' SIDE SETBACK
PER ZONING ORDINANCE

7.5' REAR SETBACK
PER ZONING ORDINANCE

25' FRONT SETBACK
PER ZONING ORDINANCE

PROPERTY
LINE

PROPERTY
LINE

PROPERTY
LINE

PLAT LINE
VOL. 2306, PG. 271

PLAT LINE
VOL. 2306, PG. 271

CITY OF BRYAN
20' ELECTRICAL EASEMENT
VOL. 187, PG. 362

CITY OF BRYAN
20' ELECTRICAL EASEMENT
VOL. 187, PG. 362

20' UTILITY EASEMENT
VOL. 2449, PG. 335
PLATTED

CITY OF COLLEGE STATION, TEXAS
VARIABLE WIDTH PUBLIC UTILITY EASEMENT
(0.78 ACRE) TRACT ONE
VOL. 7691, PG. 150
&
CITY OF BRYAN
VARIABLE WIDTH SANITARY SEWER
EASEMENT (0.78 ACRE) - TRACT ONE
VOL. 7691, PG. 131

N43°21'54"W
33.13'

N40°36'13"W~318.53'

N342°03"W~532.23'

N26°48'22"W
135.44'

N46°55'31"E~2000.06'

S33°00'26"E
1.36'

N76°03'21"E
99.38'

S10°38'17"E
199.25'

S81°33'11"E
80.46'

S51°51'58"E
108.94'

S65°55'06"E
94.20'

S6°45'01"W
92.93'

S39°07'31"W~597.14'

S35°46'27"W~306.04'

S46°24'38"E
216.97'

R150.0'

LINE TABLE:		
Line #	Direction	Length
L1	S32°03'25"W	48.00'
L2	S12°36'21"W	121.81'
L3	S27°14'30"W	99.91'
L4	N74°10'30"W	53.99'
L5	N67°37'42"W	47.38'
L6	S50°05'52"W	65.56'
L7	S66°20'55"W	50.96'
L8	S74°42'16"W	56.55'
L9	S59°37'53"W	42.40'
L10	S60°44'04"W	27.93'
L11	S42°47'02"W	96.80'
L12	N58°41'49"W	83.01'
L13	N03°36'19"W	34.53'
L14	S84°32'25"W	47.31'
L15	N58°41'49"W	30.67'

LINE TABLE:		
Line #	Direction	Length
L16	S46°12'15"W	60.77'
L17	N61°11'38"W	76.22'
L18	S80°57'42"W	84.28'
L19	S61°21'53"W	92.23'
L20	S25°51'01"W	104.38'
L21	S03°35'14"W	51.66'
L22	S44°49'59"E	89.53'
L23	S28°39'20"E	88.31'
L24	S03°27'14"E	41.16'
L25	S28°39'53"W	28.52'
L26	S31°57'40"E	144.55'
L27	S10°30'21"E	24.86'
L28	S00°15'34"W	18.14'
L29	S24°56'39"W	39.20'
L30	S70°41'34"W	65.54'

LEGEND

EXISTING CONTOUR	290'
SANITARY SEWER MANHOLE	S
12" SANITARY SEWER LINE	12"SS
6" SANITARY SEWER LINE	6"PSS
4" SANITARY SEWER LINE	4"PSS
ATMOS GAS LINE	ATMOS
TELEPHONE PEDESTAL	■
FIBER OPTICS LINE	FO
WATER METER	+
36" WATER LINE	W
12" WATER LINE	12"W
2" WATER LINE	2"PW
1.5" WATER LINE	1.5"PW
FIRE HYDRANT	
OVERHEAD ELECT. LINE	E
POWER POLE	●
BARBED WIRE FENCE	

VICINITY MAP
NOT TO SCALE

DESIGNED BY: LCH
DRAWN BY: LCH
APPROVED: AAP
JOB NO.: E0559200

DON DURDEN, INC.
d.b.a. CIVIL ENGINEERING CONSULTANTS
4101 S. TEXAS AVE., SUITE A
BRYAN, TEXAS 77802
TEL: (979) 846-8212
FAX: (979) 846-8252
REGISTRATION #F-2214

CEC
SAN ANTONIO / LAREDO
BRYAN / COLLEGE STATION

THIS DOCUMENT IS RELEASED UNDER THE AUTHORITY OF ALFRED A. PAINE, P.E. 97221 ON 9/7/2016 FOR THE PURPOSE OF INTERIM REVIEW. -NOT FOR CONSTRUCTION-

REV	DATE	DESCRIPTION

CAMPING MAXX

SHULMAN INDUSTRIAL PARK
PHASE ONE
OVERALL SITE/SUBDIVISION
BRYAN, BRAZOS COUNTY, TEXAS

SHEET NO.
C1.0

K:\data\BCS\Proj_2016\E0559200_SHULMAN INDUSTRIAL PARK - FM 2818\cadd\Engineering\E0559200 - C1.0 Overall Site_Subdivision.dwg - September 7, 2016

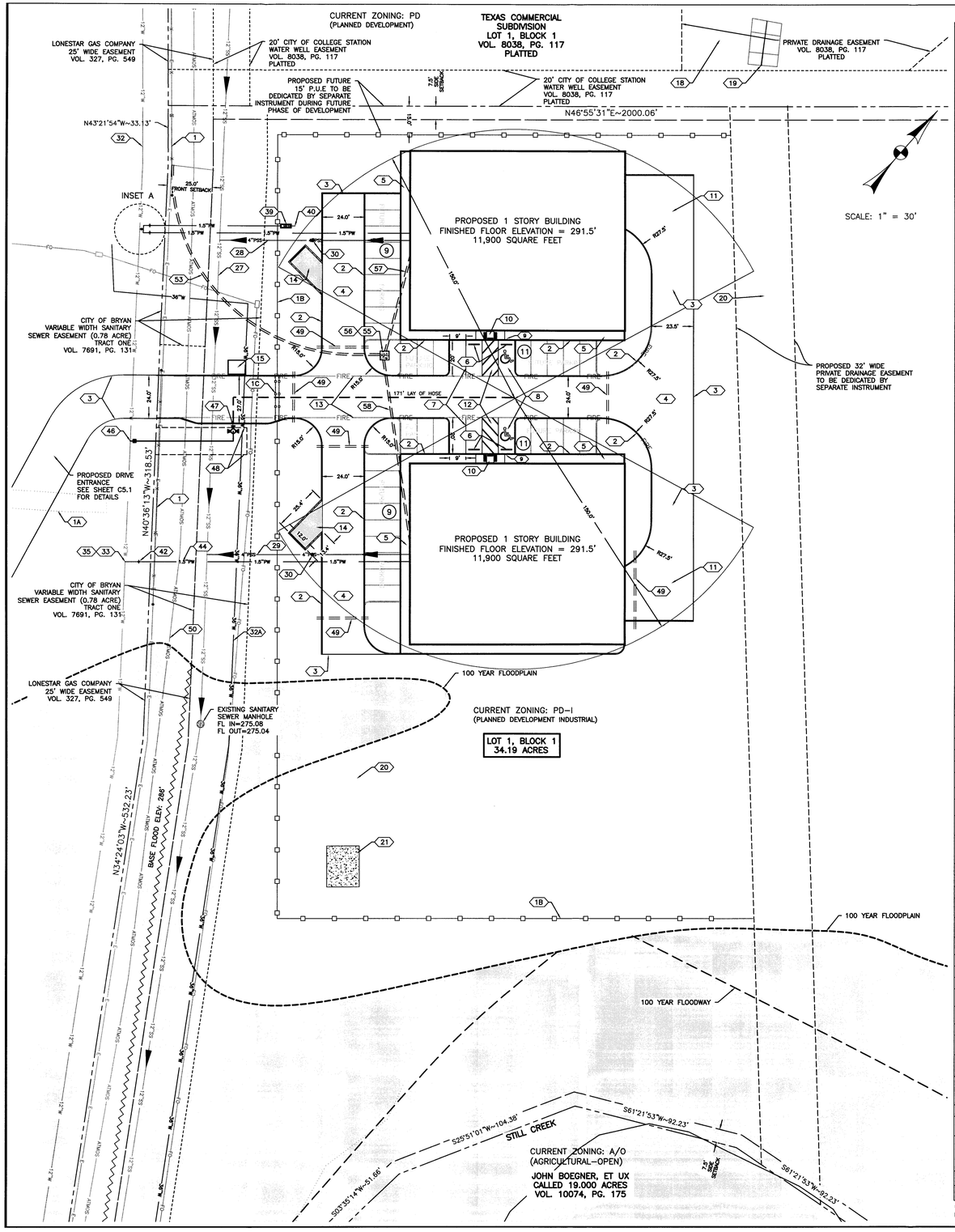

KEY NOTES

SITE	
1	EXISTING CHAIN LINK FENCE TO BE REMOVED.
1A	EXISTING GRAVEL DRIVEWAY TO BE DEMOLISHED AND REMOVED.
1B	INSTALL 6' HIGH SECURITY FENCING. FENCING TO BE APPROVED BY OWNER PRIOR TO INSTALLATION.
1C	INSTALL MANUALLY OPERATED SECURITY GATE.
2	INSTALL STANDARD 6" COMBINED SPILL CURB POURED MONOLITHICALLY WITH PAVEMENT. SEE B/CS STANDARD DETAIL ST1-04.
3	INSTALL STANDARD FLUSH RIBBON CURB POURED MONOLITHICALLY WITH PAVEMENT.
4	INSTALL 6" CONCRETE PAVEMENT, #4 BARS @ 12" O.C.E.W.
5	INSTALL 5' WIDE, 4" CONCRETE SIDEWALK, #3 BARS @ 12" O.C.E.W. SIDEWALK TO BE ADA COMPLIANT (2% OR LESS CROSS SLOPE).
6	INSTALL 6" CONCRETE WHEEL STOP (FACE OF WHEEL STOP TO BE 2' FROM END OF STALL).
7	PROVIDE 20 LF OF 4" WIDE PARKING STRIPE (TYPICAL AT ALL SPACES).
8	PROVIDE HANDICAP PARKING SPACE (VAN ACCESSIBLE WITH UNIVERSAL HANDICAP SYMBOL PAINTED IN SPACE) PER ADA/TAS REQUIREMENTS.
9	INSTALL POLE MOUNTED HANDICAP SIGN. LABEL WITH VAN ACCESSIBLE AS APPLICABLE.
10	INSTALL ADA COMPLIANT RAMP WITH LEVEL LANDING.
11	INSTALL 6" THICK CRUSHED LIMESTONE BASE (95% MOD. ASTM-D1557).
12	INSTALL ADA VAN ACCESSIBLE LOADING ZONE STRIPING PER ADA/TAS REQUIREMENTS.
13	PROVIDE FIRE LANE DESIGNATION - 6" WIDE FIRE LANE STRIP PAINTED RED WITH WORDING "FIRE LANE - NO PARKING - TOW AWAY ZONE" IN 4" WHITE LETTERS. PHRASES MAY NOT BE SPACED MORE THAN 15' APART. PAINT CURB OR PAVEMENT.
14	INSTALL 12' WIDE x 12' DEEP DUMPSTER PAD. 6" CONCRETE PAVEMENT WITH #5 BARS @ 12" O.C.E.W. (SEE DETAIL SHEET). INSTALL 6' HIGH SCREENING PER B/CS GUIDELINES
15	CONCRETE WASHOUT AREA.
16	NOT USED.
17	NOT USED.
DRAINAGE	
18	EXISTING DETENTION POND (TEXAS COMMERCIAL WASTE SITE).
19	EXISTING 18" CORRUGATED METAL PIPE WITH CONCRETE OVERFLOW SPILLWAY DETENTION OUTFALL.
20	PROPOSED DRAINAGE DITCH. SEE SHEET C3.2 GRADING PLAN FOR GRADING DETAILS.
21	INSTALL APPROXIMATELY 410 SF OF CONCRETE RIPRAP. SEE B/CS STANDARD CONCRETE RIP-RAP DETAIL D2-01.
22	NOT USED
23	NOT USED
24	PROPOSED DOWNSPOUT PER BUILDING PLANS.
25	NOT USED
26	NOT USED
SANITARY	
27	EXISTING 12" SANITARY SEWER MAIN @ 0.3% CONTRACTOR TO VERIFY DEPTH PRIOR TO CONSTRUCTION.
28	INSTALL ~106 LF OF 4" PVC (SDR 26, ASTM D3037, GASKETED) SANITARY SEWER SERVICE, DEEP CUT CONNECTION, (AT 4' BELOW FINISHED FLOOR) @ 1.0% CAP AND MARK END WITH 4" PVC PIPE PAINTED GREEN EXTENDING 4' ABOVE GROUND. SEE CITY OF BRYAN STANDARD SANITARY SEWER SERVICE CONNECTION DETAIL SS-01.
29	INSTALL ~113 LF OF 4" PVC (SDR 26, ASTM D3037, GASKETED) SANITARY SEWER SERVICE, DEEP CUT CONNECTION, (AT 4' BELOW FINISHED FLOOR) @ 1.0% CAP AND MARK END WITH 4" PVC PIPE PAINTED GREEN EXTENDING 4' ABOVE GROUND. SEE CITY OF BRYAN STANDARD SANITARY SEWER SERVICE CONNECTION DETAIL SS-01.
30	INSTALL CLEANOUT TO SERVICE LINE WITH PVC WYE. CONTRACTOR TO VERIFY DEPTH PRIOR TO CONSTRUCTION. INSTALL CLEANOUT COVER FLUSH WITH FINISHED GRADE.
31	NOT USED
WATER	
32	EXISTING 12" WATER LINE. ASSUMED 5' BURY DEPTH. CONTRACTOR TO VERIFY DEPTH PRIOR TO CONSTRUCTION.
32A	EXISTING 36" WATER LINE. MINIMUM 5' BURY DEPTH. CONTRACTOR TO VERIFY DEPTH PRIOR TO CONSTRUCTION.
33	INSTALL 2" SMITH-BLAIR 665 SS TAPPING SLEEVE W/ SB 317 SS SADDLE & VALVE.
34	INSTALL 2"x2" TEE.
35	INSTALL 2" TO 1.5" REDUCER.
36	INSTALL TWO (2) 45° BENDS.
37	1.5" WATER METER FOR IRRIGATION. CONTRACTOR COORDINATE WITH CITY OF BRYAN FOR INSTALLATION OF METER.
38	1.5" WATER SERVICE FOR IRRIGATION. CONTRACTOR COORDINATE WITH CITY OF BRYAN FOR INSTALLATION OF METER.
39	INSTALL BACKFLOW PREVENTER (DOUBLE CHECK VALVE) ON NEW IRRIGATION LINE.
40	INSTALL APPROXIMATELY 2 LF OF 1.5" WATER LINE STUBOUT FOR IRRIGATION LINES. CAP AND MARK END WITH 4" PVC PIPE PAINTED BROWN EXTENDING 3' ABOVE GROUND.
41	NOT USED.
42	1.5" WATER SERVICE METER. CONTRACTOR COORDINATE WITH CITY OF BRYAN FOR INSTALLATION OF METER.
43	INSTALL ~145 LF OF 1.5" WATER SERVICE LINE. REFER TO CITY OF BRYAN STANDARD TAP DETAIL WS-02.
44	INSTALL ~151 LF OF 1.5" WATER SERVICE LINE. REFER TO CITY OF BRYAN STANDARD TAP DETAIL WS-02.
45	NOT USED.
46	INSTALL 6" SMITH-BLAIR 665 SS TAPPING SLEEVE W/ MJ VALVE FOR FIRE HYDRANT LEAD.
47	INSTALL STANDARD BRYAN FIRE HYDRANT ASSEMBLY WITH APPROXIMATELY 65 LF OF LINE AND ALL REQUIRED APPURTENANCES. SEE SHEET C5.2 FOR PLAN AND PROFILE OF FIRE HYDRANT LINE.
48	PROPOSED 15' WIDE PUBLIC UTILITY EASEMENT BY SEPARATE INSTRUMENT (EXTENDS 7.5' BEYOND FIRE HYDRANT).
49	INSTALL IRRIGATION SLEEVES (2-4" PVC-SCHED 40) EXTEND 3' BEYOND BACK OF CURB OR EDGE OF PAVEMENT. CAP & MARK ENDS WITH 4" PVC PAINTED BROWN EXTENDING 3' ABOVE GROUND
ATMOS GAS	
CONTACT LUIS CISNEROS (PH:979-774-2506, EMAIL: LUIS.CISNEROS@ATMOSENERGY.COM) FOR EXACT ROUTING, MATERIALS, DESIGN, & LOCATION.	
50	EXISTING ATMOS GAS LINE.
51	NOT USED
52	NOT USED
ELECTRICAL	
CONTACT BRANDON CHARANZA (PH: 979-821-5784) @ BTU FOR EXACT REQUIREMENTS.	
53	INSTALL ~180 LF PRIMARY ELECTRIC CONDUIT (3-2" GRAY SCHED. 40 PVC W/ PULL STRINGS & END CAPS). @ 4' BURY (TO BE PULLED BY BTU).
54	NOT USED
55	INSTALL ELECTRICAL TRANSFORMER PAD PER BTU SPECIFICATIONS. SPECIFICATIONS TO BE DETERMINED.
56	ELECTRIC METER @ TRANSFORMER, INSTALLED BY BTU
57	INSTALL ~57 LF SECONDARY ELECTRICAL CONDUIT. ONE (1) 4" SCHEDULE 40 ELECTRICAL CONDUIT @ 4' BURY (TO BE PULLED BY CONTRACTOR).
58	INSTALL ~105 LF SECONDARY ELECTRIC CONDUIT. ONE (1) 4" SCHEDULE 40 ELECTRICAL CONDUIT @ 4' BURY (TO BE PULLED BY CONTRACTOR).
59	NOT USED
VERIZON & SUDDENLINK	
CONTACT BRENDA VAJDAK (PH: 979-821-4770) @ VERIZON FOR EXACT REQUIREMENTS. INSTALL 2-4" PVC VERIZON CONDUIT @ 36" BURY.	
CONTACT DAN AUGSBURGER (PH: 979-595-2429) @ SUDDENLINK FOR EXACT REQUIREMENTS. SUDDENLINK CONDUIT TO FOLLOW VERIZON ROUTE. INSTALL 2-2" PVC CONDUIT, MIN. 30" BURY, PROVIDE MIN. 9" VERTICAL SEPARATION BETWEEN CROSSING UTILITIES.	
60-80	RESERVED

FIRE COVERAGE ANALYSIS

BUILDING DESIGNATION	SQUARE FOOTAGE (sf)	MIN. REQ'D FIRE FLOW (gpm)	MIN. REQ'D # OF FIRE HYDRANTS	HYDRANTS PROVIDED
TYPE IIB	11,900	1,500	1	1

*NO PORTION OF ANY BUILDING IS MORE THAN 150' FROM THE FIRE LANE. SEE SHEET C6.2 FOR FIRE COVERAGE EXHIBIT.

SITE SPECIFIC NOTES:

1. PROJECT IDENTIFICATION:
   PROJECT NAME: SHULMAN INDUSTRIAL PARK
   LOCATION: EAST SIDE OF FM 2818 AND APPROXIMATELY 1800 FEET NORTH OF HIGHWAY 21
   SITE ADDRESS: 1812 N. HARVEY MITCHELL PARKWAY, BRYAN, TEXAS
   LEGAL DESCRIPTION: SHULMAN INDUSTRIAL PARK, LOT 1, BLOCK 1, JOHN AUSTIN SURVEY, A-62, BRYAN, BRAZOS COUNTY, TEXAS.
2. OWNER BY: RAFEK N. SHAMA AND SUZANNE M. CHAMSEDDINE 603 FRONTIER TRAIL HARKER HEIGHTS, TX 76548-5619
   DEVELOPED BY: CAMPING MAXX C/O MR. JERRY SHULMAN 6102 PINTO RUN COLLEGE STATION, TX 77845
3. TOTAL SITE AREA: 34.19 ACRES.
   TOTAL DEVELOPED AREA: APPROXIMATELY 2.90 ACRES
4. CURRENT USE: VACANT
5. PROPOSED USE & IMPROVEMENTS: TWO (2) - 11,900 SQUARE FOOT WAREHOUSE AND COMMERCIAL BUILDINGS TO INCLUDE PARKING, DRIVE AISLES, UTILITIES AND LANDSCAPING.
6. A PORTION OF THE SUBJECT TRACT LIES WITHIN THE 100 YEAR FLOODPLAIN ACCORDING TO THE F.E.M.A. FLOOD INSURANCE RATE MAP FOR BRAZOS COUNTY, TEXAS AND INCORPORATED AREAS. COMMUNITY NO. 480082, PANEL NO. 0195E, MAP NO. 48041C0195E. MAP REVISED TO REFLECT LOMR EFFECTIVE JULY 7, 2014.
7. ALL PUBLIC AND PRIVATE UTILITY LINES & SERVICE LINES INCLUDING WATERLINES, SANITARY SEWER LINES, ELECTRIC LINES, TV/CABLE, COMMUNICATIONS LINES, etc. SHALL BE UNDERGROUND INSTALLATIONS AND INSTALLED TO THE STANDARDS AND SPECIFICATIONS OF THE APPLICABLE GOVERNING AGENCY.
8. IRRIGATION SYSTEM TO BE DESIGNED & INSTALLED BY OTHERS.
9. TOTAL BUILDING AREA : 23800 SQ.FT. (GROSS) (2 BUILDINGS @ 11,900 SF EACH).
10. ALL DISTURBED EARTH MUST BE 100% COVERED WITH ESTABLISHED GRASS OR GROUND COVER PRIOR TO CERTIFICATE OF OCCUPANCY.
11. ALL BACK FLOW DEVICES MUST BE INSTALLED AND TESTED UPON INSTALLATION AS PER APPLICABLE CITY ORDINANCE.
12. THE GENERAL CONTRACTOR IS RESPONSIBLE FOR COORDINATING INSTALLATION OF ALL FRANCHISE & PRIVATE UTILITIES WITH EARTHWORK & PAVEMENT CONSTRUCTION. GENERAL CONTRACTOR IS RESPONSIBLE FOR FURNISHING & INSTALLING ANY NECESSARY UTILITY CONDUIT PRIOR TO SUBGRADE PREPARATION & PAVING OPERATION. GENERAL CONTRACTOR IS RESPONSIBLE FOR DETERMINATION OF UTILITY INSTALLATION ORDER.
13. ALL ROOF AND GROUND MOUNTED MECHANICAL EQUIPMENT SHALL BE SCREENED FROM VIEW FROM ANY PUBLIC RIGHT-OF-WAY OR RESIDENTIAL DISTRICT WITHIN 150' OF THE SUBJECT LOT. SUCH SCREENING SHALL BE COORDINATED WITH BUILDING ARCHITECTURE.
14. THE CONTRACTOR SHALL BE RESPONSIBLE FOR THE CONTAINMENT AND PROPER DISPOSAL OF ALL LIQUID AND SOLID WASTE ASSOCIATED WITH THIS PROJECT. THE CONTRACTOR SHALL USE ALL MEANS NECESSARY TO PREVENT THE OCCURRENCE OF WIND BLOWN LITTER FROM THE PROJECT SITE.
15. DEMOLITION / CONSTRUCTION WASTE: SITE IS REQUIRED TO PROVIDE CONTAINMENT FOR WASTE PRIOR TO AND DURING DEMOLITION / CONSTRUCTION. SOLID WASTE ROLL OFF BOXES AND/OR METAL DUMPSTERS SHALL BE PROVIDED BY CONTRACTOR WHEN NECESSARY.
16. PARKING: THERE ARE 38 REGULAR PARKING SPACES AND 2 HANDICAP SPACES - 40 TOTAL SPACES. THERE WILL BE NO MORE THAN TWO (2) EMPLOYEES WORKING AT ANY GIVEN TIME DURING THE WORK DAY, THEREFORE ONLY THREE 93) SPACES WILL BE CONSTRUCTED AT THIS TIME. THE THREE SPACES WILL CONSIST OF TWO (2) REGULAR SPACES AND ONE (1) ACCESSIBLE SPACE.
17. ALL ELECTRIC & COMMUNICATIONS CONDUIT TO BE INSTALLED W/ PULL STRING AND END CAPS, WITH ENDS EXTENDING 2' BEYOND PAVEMENT. MARK ENDS OF CONDUIT WITH PVC EXTENDING 3' ABOVE GROUND AS FOLLOWS: ELECTRIC-4" PAINTED RED; VERIZON/COMMUNICATIONS-3" PAINTED ORANGE; IRRIGATION-3" PAINTED BROWN; WATER-4" PAINTED BLUE.
18. ITEMS CALLED AS "PROPOSED", "PROVIDE" OR "INSTALL" ARE TO BE FURNISHED AND INSTALLED BY THE CONTRACTOR INCLUSIVE OF ANY MATERIALS, LABOR, EQUIPMENT, AND OTHER REQUIREMENTS FOR A COMPLETE AND FUNCTIONING SITE ELEMENT. ALL ITEMS NECESSARY FOR PROPER COMPLETION OF THE WORK NOT SPECIFICALLY CALLED FOR OR SPECIFIED ON THE PLANS ARE THE RESPONSIBILITY OF THE CONTRACTOR AND CONSIDERED SUBSIDIARY TO THE WORK.
20. ALL RADII AND PAVEMENT ARE DIMENSIONED FROM THE BACK OF CURB UNLESS OTHERWISE NOTED.
21. ALL SIGNAGE IS PERMITTED SEPARATELY.
22. SITE LIGHTING IS TO BE INSTALLED WITH THIS PROJECT. THE OWNER WILL SPECIFY TYPE OF LIGHT FIXTURE AND POLE TO BE USED. SITE LIGHTING IS CONSIDERED TO BE A PERFORMANCE SPECIFICATION. CONTRACTOR SHALL REFER TO OWNER'S ELECTRICIAN ELECTRICAL PLANS FOR FINAL TYPES & LOCATION OF ALL SITE LIGHTING & CONDUIT ROUTING. CONTRACTOR IS TO FURNISH & INSTALL ALL LIGHT POLE BASES, CONDUIT WITH PULL STRING, WIRING, PULL BOXES, TRANSFORMERS, PANELS AND ALL APPURTENANCES NECESSARY FOR PROPER OPERATION OF THE LIGHTING SYSTEM. CONTRACTOR TO RECORD LOCATIONS OF ALL CONDUIT ROUTES.
23. CONCRETE WASHOUT AREA(S) TO BE OVER EXCAVATED AND WASTE MATERIAL REMOVED & DISPOSED OF OFF-SITE PRIOR TO PROJECT CLOSEOUT. FILL AREA BACK TO PLAN GRADE / EXISTING GROUND.
24. ALL TAPPING SLEEVES TO BE SMITH-BLAIR 665 SS W/ MJ VALVE.
25. PROPOSED FUTURE 15' PUBLIC UTILITY EASEMENT ALONG NORTH LINE OF TRACT TO BE DEDICATED BY SEPARATE INSTRUMENT FOR FUTURE ON-SITE PUBLIC WATER LINE EXTENTSION AT THE TIME OF FUTURE PHASE DEVELOPMENT.

GENERAL NOTES:

1. ALL UTILITIES AND SERVICE LINES SHOWN ARE TAKEN FROM BEST AVAILABLE RECORD INFORMATION BASED ON CONSTRUCTION UTILITY MAP DOCUMENTS OBTAINED BY CIVIL ENGINEERING CONSULTANTS (CEC) FROM CITY & INDEPENDENT AGENCIES AND/OR ABOVE GROUND FIELD EVIDENCE. SHOWN POSITIONS MAY NOT REPRESENT AS-BUILT POSITIONS.

   CONTRACTOR IS RESPONSIBLE TO REPORT ANY CONFLICTS BETWEEN PLAN AND ACTUAL CONDITIONS PRIOR TO CONSTRUCTION OF WORK ELEMENT AFFECTED. OWNER AND ENGINEER SHALL NOT BE RESPONSIBLE FOR THE ACCURACY OR COMPLETENESS OF INFORMATION OR DATA RELIED ON TO DEPICT UNDERGROUND FACILITIES. CONTRACTOR IS TO CONTACT OWNERS OF ALL UTILITIES AND SERVICE LINES WITHIN THE PROJECT AREA AND NOTIFY OF INTENT AT LEAST 1 WEEK PRIOR TO CONSTRUCTION. CONTRACTOR IS RESPONSIBLE FOR COORDINATING WITH FACILITY OWNERS, CONTRACTOR IS TO VERIFY THE EXACT LOCATION AND VERTICAL POSITIONING OF ALL PIPELINES, EXISTING UTILITIES, AND SERVICE LINES WITHIN THE PROJECT AREA WHETHER SHOWN ON THE PLANS OR NOT, AT LEAST 48 HOURS PRIOR TO CONSTRUCTION. CONTRACTOR IS RESPONSIBLE FOR COORDINATING WITH FACILITY OWNERS AND ANY RELOCATION, REMOVAL, AND INSTALLATION, OR ADJUSTMENTS TO ALL EXISTING FACILITIES REQUIRED FOR PROSECUTION OF THE WORK. CONTRACTOR IS TO MAINTAIN STRUCTURAL INTEGRITY OF ALL PIPELINES, ELECTRIC TRANSMISSION POLES AND LINES, PERMANENT AND TEMPORARY UTILITIES. CONTRACTOR IS RESPONSIBLE FOR ANY DAMAGE DONE TO EXISTING UTILITY FACILITIES, PAVEMENT, ETC. AS A RESULT OF CONSTRUCTION ACTIVITIES.

   CONTRACTOR TO CONTACT TEXAS811 & CITY OF BRYAN WATER SERVICES DEPARTMENT 96 HOURS PRIOR TO CONSTRUCTION. SPECIFIC ATTENTION SHOULD BE PAID TO FRANCHISE UTILITIES AS WELL AS OIL AND GAS PIPELINE COMPANIES. SHOULD A CONFLICT ARISE BETWEEN THE PROPOSED CONSTRUCTION AND AN EXISTING UTILITY, CONTACT CEC 48 HOURS PRIOR TO CONSTRUCTION.
2. CONTRACTOR IS TO MAINTAIN AND INSURE INTEGRITY OF ALL EXISTING UTILITIES. CLOSE ATTENTION IS TO BE PAID TO ANY EXISTING POWER, TELEPHONE, & FIBER OPTIC LINES & POLES.
3. UNLESS OTHERWISE DIRECTED BY THE OWNER, ALL MATERIALS AND DEBRIS DEMOLISHED OR REMOVED SHALL BECOME THE PROPERTY OF THE CONTRACTOR AND SHALL BE REMOVED FROM THE SITE AND DISPOSED OF IN A MANNER SATISFACTORY TO THE OWNER & ENGINEER.
4. CONTRACTOR SHALL PREVENT TRANSPORT OF SEDIMENT TO ADJACENT PROPERTIES AND PUBLIC RIGHT OF WAYS AND IS RESPONSIBLE FOR CLEANUP IF SUCH OCCURS. CONTRACTOR IS TO INSURE NO CONSTRUCTION DEBRIS OR MUD IS TRACKED OR DISCARDED ON TO ANY PUBLIC OR PRIVATE STREETS OR LAND AND IS RESPONSIBLE FOR SITE CLEANUP AFTER EACH DAYS WORK. CONTRACTOR IS TO MAKE USE OF BEST MANAGEMENT PRACTICES TO PREVENT SEDIMENT FROM LEAVING THE SITE OR ENTERING EXISTING STORM SEWER OR CREEK AREAS. CONTRACTOR SHALL MAINTAIN EROSION CONTROL THROUGHOUT CONSTRUCTION PERIOD AND UNTIL GRASS IS ESTABLISHED.
5. CONTRACTOR IS TO BROADCAST SEED ALL DISTURBED AREAS FOR RE-ESTABLISHMENT OF VEGETATION WITH GRASS SEED MIX AS INDICATED IN THE SWP3 PLAN OR LANDSCAPE PLAN (DEPENDING ON LOCATION). CONTRACTOR TO DISK AREAS TO BE SEEDED TO A DEPTH OF 6". CONTRACTOR TO GUARANTEE COVERAGE AND ESTABLISHMENT OF GRASS FOR A PERIOD OF 8 MOS. COVERAGE SHALL BE DEFINED AS 95% OF THE PLANTED AREA WITH UNIFORM COVERAGE OF GRASS GREATER THAN 1" IN HEIGHT WITH NO BARE SPOTS GREATER THAN 2 SF.
6. LIMITS OF WORK: CONTRACTOR IS TO CONFINE ALL WORK TO OWNER'S PROPERTY. NO CONSTRUCTION ACTIVITY IS ALLOWED ON OR THROUGH PRIVATE PROPERTY UNLESS COVERED BY A PUBLIC UTILITY EASEMENT OR OTHER DOCUMENTED AGREEMENT.
7. CONTRACTOR SHALL BE RESPONSIBLE FOR THE CONTAINMENT AND PROPER DISPOSAL OF ALL LIQUID AND SOLID WASTE ASSOCIATED WITH THIS PROJECT. THE CONTRACTOR SHALL USE ALL MEANS NECESSARY TO PREVENT THE OCCURRENCE OF WIND BLOWN LITTER FROM THE PROJECT SITE.

UTILITY DEMANDS:

WATER & SANITARY SEWER DEMANDS:

WATER:
AVERAGE DEMAND ..... 14,400 GPD (10 GPM)
PEAK DEMAND ..... AVERAGE DEMAND X 4
PEAK DEMAND ..... 40 GPM

SANITARY SEWER:
AVERAGE DEMAND ..... 14,400 GPD (10 GPM)
PEAK DEMAND ..... AVERAGE DEMAND X 4
PEAK DEMAND ..... 40 GPM

NOTE: DEMANDS BASED ON HISTORICAL DATA FOR WAREHOUSES OF SIMILAR SIZE AND USE.

PARKING ANALYSIS:

PARKING SPACES REQUIRED:
WAREHOUSE & ENCLOSED STORAGE: - 1 SPACE / 600 GFA
11900 GFA / 600 = 20 SPACES PER BUILDING
TOTAL SPACES REQUIRED FOR TWO BUILDINGS: 40

SPACES PROVIDED:
STANDARD= 38
HANDICAP= 2
TOTAL SPACES PROVIDED: *40

*THERE WILL BE NO MORE THAN TWO (2) EMPLOYEES WORKING AT THE BUILDING AT ANY GIVEN TIME DURING THE WORK DAY, THEREFORE ONLY THREE (3) SPACES WILL BE CONSTRUCTED PER BUILDING AT THIS TIME. THE THREE SPACES WILL CONSIST OF TWO (2) REGULAR SPACES AND ONE (1) ADA SPACE PER BUILDING.

(XX) INDICATES PARKING SPACE COUNT

INSET A
(NOT TO SCALE)

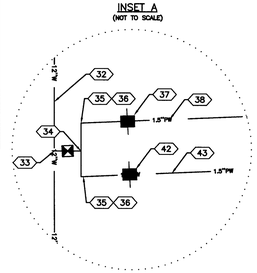

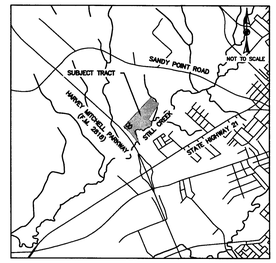

DESIGNED BY: SJH
DRAWN BY: SJH
APPROVED: AAP
JOB NO: E0559200

DON URDEN, INC
d.b.a. CIVIL ENGINEERING CONSULTANTS
4101 S. TEXAS AVE., SUITE A
BRYAN, TEXAS 77802
FAX: (979) 846-8252
REGISTRATION #F-2214

CEC
SAN ANTONIO / LAREDO
BRYAN / COLLEGE STATION

THIS DOCUMENT IS RELEASED UNDER THE AUTHORITY OF ALFRED A. PAINE, P.E. 97221 ON 9/7/2016 FOR THE PURPOSE OF INTERIM REVIEW. -NOT FOR CONSTRUCTION-

REV	DATE	DESCRIPTION

CAMPING MAXX

SHULMAN INDUSTRIAL PARK (34.19 ACRES)
PHASE ONE
SITE PLAN
BRYAN, BRAZOS COUNTY, TEXAS

SHEET NO.
C1.1

I:\data\BCS\Proj_2016\E0559200_SHULMAN INDUSTRIAL PARK - FM 2818\civil\Engineering\E0559200 - C1.1 Site Plan.dwg - September 7, 2016

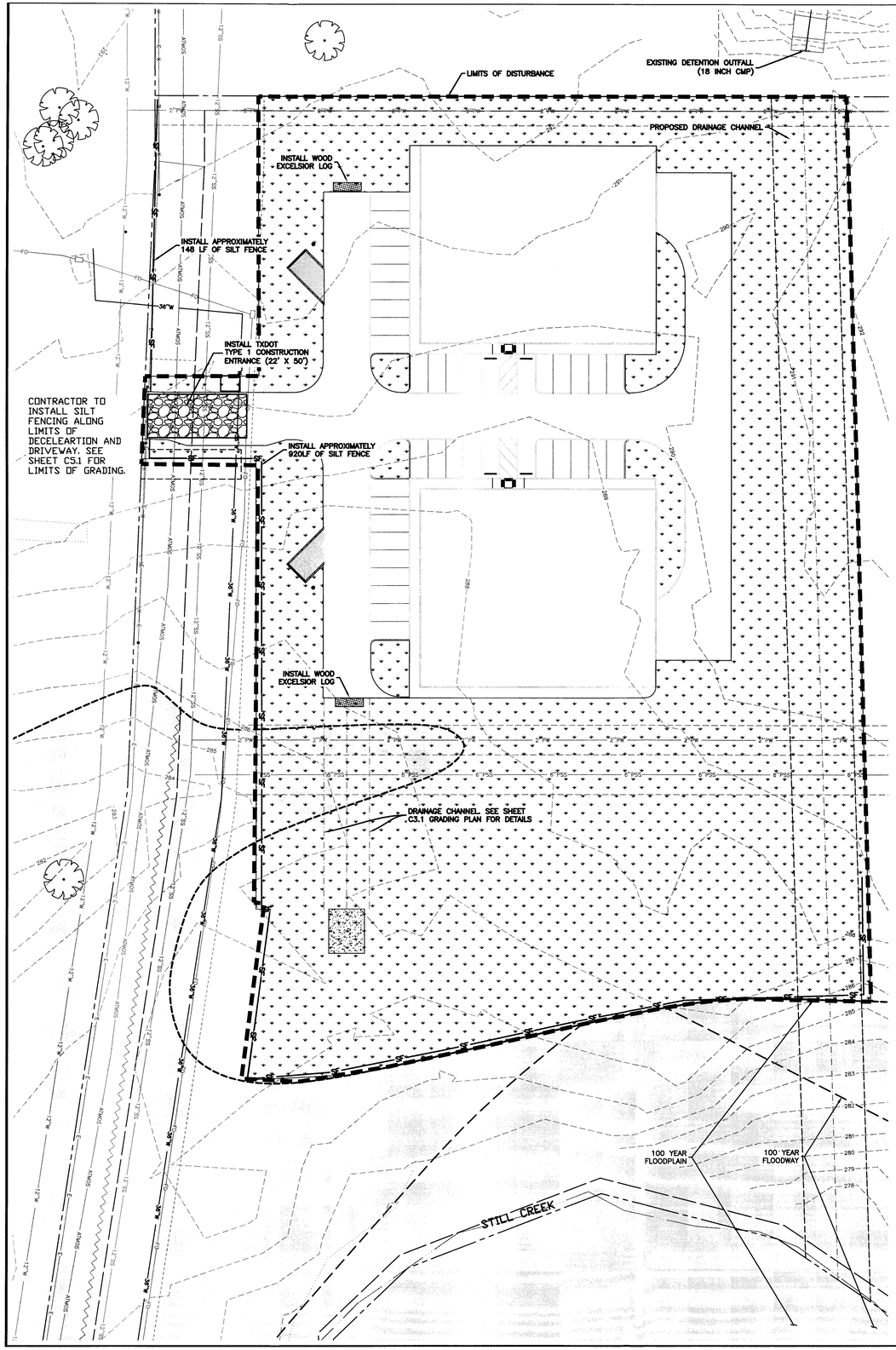

SCALE: 1" = 30'

DESCRIPTION OF CONTROLS

EROSION AND SEDIMENT CONTROL:
1. SILT FENCE
2. ROCK CONSTRUCTION ENTRANCE
3. SEDIMENT TRAP

INSTALL EROSION & SEDIMENT CONTROL DEVICES PER DETAILS HEREON.

SEDIMENT MUST BE REMOVED FROM SEDIMENT CONTROL DEVICES PRIOR TO SEDIMENT REACHING 1/2 THE HEIGHT OF THE DEVICE OR STRUCTURE.

IF SEDIMENT ESCAPES FROM THE SITE AREA, ACCUMULATIONS MUST BE REMOVED AT A FREQUENCY TO MINIMIZE FURTHER NEGATIVE EFFECTS, AND WHENEVER FEASIBLE, PRIOR TO THE NEXT RAIN EVENT.

STABILIZATION PRACTICES:
TEMPORARY STABILIZATION: ALL STOCK PILED AND OTHER DISTURBED AREAS WHERE CONSTRUCTION ACTIVITIES TEMPORARILY CEASE FOR AT LEAST 21 DAYS WILL BE SEEDED NO LATER THAN 14 DAYS FROM THE LAST CONSTRUCTION ACTIVITY IN THAT AREA.

PERMANENT STABILIZATION: ALL DISTURBED AREAS WHERE CONSTRUCTION ACTIVITIES PERMANENTLY CEASE SHALL BE SODDED OR HYDROMULCH SEEDED (AS PER PLAN) FOR PERMANENT EROSION CONTROL NO LATER THAN 14 DAYS FROM THE LAST CONSTRUCTION ACTIVITY IN ACCORDANCE WITH TXDOT 162/164. PRIOR TO FINAL REVEGETATION, CONTRACTOR IS TO REPLACE TOPSOIL TO A DEPTH OF 6". TOPSOIL IS TO BE DISKED TO A DEPTH OF AT LEAST 4" AND LIGHTLY COMPACTED.

HYDROMULCH: TO BE "EXCEL FIBERMULCH II W/ TACKIFIER – APPLICATION RATE OF 2500 LBS/ACRE. GRASS SEED AND FERTILIZER TO BE INCORPORATED INTO SLURRY.
GRASS SEED MIX: SUMMER–HULLED COMMON BERMUDA GRASS, MIN. 85% PURE LIVE SEED @ 90 lbs. PER ACRE.
WINTER–UNHULLED COMMON BERMUDA GRASS, MIN. 85% PURE LIVE SEED @ 90 lbs. PER ACRE + ANNUAL RYE GRASS, MIN. 85% PURE LIVE SEED @ 175 lbs. PER ACRE.
FERTILIZER: 3–1–2 RATIO FERTILIZER W/ SULFUR & TRACE ELEMENTS @ 350 lbs PER ACRE.

MAINTENANCE: SHALL CONSIST OF WEEDING, FERTILIZING, INSECT CONTROL, WATERING, REPLANTING, MOWING, MAINTAINING OF EXISTING GRADES, AND REPAIR OF ANY EROSION DAMAGES FOR ALL AREAS WHERE SEEDING AND MULCHING WORK IS COMPLETED. MAINTENANCE TO BE CONDUCTED DURING THE PLANTING PERIOD THRU 90 DAYS AFTER THE WORK IS COMPLETED, INSPECTED AND APPROVED BY THE ENGINEER AND OWNER.

GUARANTEE: CONTRACTOR IS RESPONSIBLE FOR WATERING, MAINTENANCE AND ESTABLISHMENT OF GRASS FOR A PERIOD OF 90 DAYS AFTER FINAL REVEGETATION APPLICATION FOR PERMANENT EROSION CONTROL. CONTRACTOR IS TO GUARANTEE ALL PLANTED MATERIAL GROWTH AND COVERAGE FOR A PERIOD OF 6 MONTHS, AND ANY UNSATISFACTORY SHALL BE REPLACED AS 95% OF THE PLANTED AREA WITH UNIFORM COVERAGE OF GRASS GREATER THAN 1" IN HEIGHT WITH NO BARE SPOTS GREATER THAN 2 SQUARE FEET.

–PROVIDE A SECOND APPLICATION OF SPECIFIED SOD OR HYDROMULCH SEEDING (AS PER PLAN) TO BARE AREAS NOT MEETING SPECIFIED COVERAGE – TO BE PERFORMED WITHIN 60 DAYS OF INITAL APPLICATION AND IMMEDIATELY UPON NOTIFICATION BY THE ENGINEER OR OWNER.

RECORD KEEPING: CONTRACTOR IS RESPONSIBLE FOR RECORDING & MAINTAINING THE FOLLOWING:
1. DATES WHEN MAJOR GRADING ACTIVITIES OCCUR
2. DATES WHEN CONSTRUCTION ACTIVITIES TEMPORARILY OR PERMANENTLY CEASE ON A PORTION OF THE SITE.
3. DATES WHEN STABILIZATION MEASURES ARE INITIATED.

RECORDS MUST BE KEPT WITH THE SWP3 AND MADE READILY AVAILABLE UPON REQUEST TO THE PARTIES IN PART III.D.1 OF THE TPDES GENERAL PERMIT TXR150000.

STRUCTURAL CONTROL PRACTICES:
TEMPORARY EROSION CONTROLS TO INCLUDE INSTALLATION OF SILT FENCE, GRAVEL FILTER BAGS AND CONSTRUCTION ENTRANCE(S). CONTRACTOR SHALL PREVENT TRANSPORT OF SEDIMENT TO DOWNSTREAM AREAS AND IS RESPONSIBLE FOR CLEANUP AND RESTORATION IF SUCH SHOULD OCCUR.

SILT FENCE TO BE INSTALLED PER DETAIL AT TOE OF DOWNHILL SLOPES AS SHOWN ON PLAN. HAY BALE CHECK STRUCTURES (IF NEEDED) ARE TO BE INSTALLED PER PLAN AT UPSTREAM END OF OUTLET WORKS.

ALL EROSION CONTROL DEVICES ARE TO BE MAINTAINED UNTIL ESTABLISHMENT OF GRASS OCCURS.

PERMANENT STORM WATER CONTROLS:
STORM WATER WILL BE CONVEYED VIA OVERLAND FLOW AND ENTER STILL CREEK APPROXIMATELY 900 FEET UPSTREAM FROM THE EXISTING TXDOT CULVERT STRUCTURE ON THE EAST SIDE OF F.M.2818.

OTHER CONTROLS
OFFSITE VEHICLE TRACKING:
CONTRACTOR IS TO INSURE NO CONSTRUCTION DEBRIS OR MUD IS TRACKED ON OR DISCARDED ONTO ANY PUBLIC OR PRIVATE STREETS OR LANDS AND IS RESPONSIBLE FOR CLEANUP AFTER EACH DAYS WORK. INSTALL ROCK CONSTRUCTION ENTRANCE AS INDICATED WITH CURB PROTECTION. CONTRACTOR IS RESPONSIBLE TO RESTORE ANY DAMAGE DONE TO EXISTING STREETS OR INFRASTRUCTURE.

WASTE MATERIALS:
ALL WASTE MATERIALS ARE TO BECOME PROPERTY OF THE CONTRACTOR AND ARE TO BE REMOVED AND DISPOSED OF OFF–SITE. NO ON–SITE BURYING OF WASTE MATERIALS IS ALLOWED. AT THE END OF EACH WORKING DAY, THE CONTRACTOR SHALL GATHER AND COLLECT ALL WASTEMATERIALS AND STORE IN AN ACCEPTABLE MANNER WHICH PREVENTS MATERIALS FROM BEING BLOWN OR OTHERWISE REDISTRIBUTED ACROSS THE SITE OR ADJACENT LANDS OR WATER COURSES.

HAZARDOUS WASTE: ALL HAZARDOUS WASTE MATERIALS SHALL BE DISPOSED OF AS PER LOCAL OR STATE REGULATIONS AND IN ACCORDANCE WITH MFR'S SPECIFICATIONS.

TIMING OF CONTROLS/MEASURES
- INSTALL SILT FENCING.
- INSTALL ROCK CONSTRUCTION ENTRANCE(S)
- DISTURBED AREAS WHERE CONSTRUCTION ACTIVITY TEMPORARILY CEASES FOR MORE THAN 21 DAYS ARE TO BE STABILIZED WITH HYDROMULCH SEEDING OR BROADCAST SEEDING (AS PER PLAN) NO LATER THAN 14 DAYS FROM THE LAST CONSTRUCTION ACTIVITY IN THAT AREA.
- DURING CLEARING/GRADING ACTIVITIES, SEDIMENT COLLETCING AT CHECK STRUCTURES AND SILT FENCE SHALL BE REMOVED AS IT REACHES 1/2 THE HEIGHT OF THE STRUCTURE.
- ALL DISTURBED AREAS WHERE CONSTRUCTION ACTIVITIES PERMANENTLY CEASE SHALL BE HYDROMULCH SEEDED OR BROADCAST SEEDED (AS PER PLAN) FOR PERMANENT EROSION CONTROL NO LATER THAN 14 DAYS FROM THE LAST CONSTRUCTION ACTIVITY.

INSPECTION OF CONTROLS:
IN THE EVENT OF FLOODING OR OTHER UNCONTROLLABLE SITUATIONS WHICH PROHIBIT ACCESS TO THE INSPECTION SITES, INSPECTIONS MUST BE CONDUCTED AS SOON AS ACCESS IS PRACTICABLE.

CONTRACTOR PERSONNEL FAMILIAR WITH THE SWP3 MUST INSPECT DISTURBED AREAS THAT HAVE NOT BEEN FINALLY STABILIZED, AREAS USED FOR STORAGE OF MATERIALS EXPOSED TO PRECIPITATION, AND STRUCTURAL CONTROLS FOR EVIDENCE OF, OR POTENTIAL FOR, POLLUTANTS ENTERING THE DRAINAGE SYSTEM. SEDIMENT & EROSION CONTROL DEVICES MUST BE INSPECTED TO ENSURE PROPER OPERATION. VEHICLE ENTRANCE/EXIT LOCATIONS MUST BE INSPECTED FOR EVIDENCE OF OFF–SITE SEDIMENT TRACKING.

INSPECTIONS MUST BE CONDUCTED AT LEAST ONCE EVERY SEVEN (7) CALENDER DAYS OR ONCE EVERY FOURTEEN (14) CALENDER DAYS AND WITHIN TWENTY FOUR (24) HOURS OF THE END OF A STORM EVENT OF 0.5 INCHES OR GREATER.

THE SWP3 MUST BE MODIFIED BASED ON RESULTS OF INSPECTIONS, AS NECESSARY, TO BETTER CONTROL POLLUTANTS IN RUNOFF. REVISIONS TO THE SWP3 TO BE COMPLETED WITHIN SEVEN (7) CALENDAR DAYS FOLLOWING THE INSPECTION IN ACCORDANCE WITH THE TPDES GENERAL PERMIT.

A REPORT IN ACCORDANCE WITH THE TPDES GENERAL PERMIT MUST BE MAINTAINED BY THE CONTRACTOR AND RETAINED AS PART OF THE SWP3.

GENERAL NOTES

1. ALL UTILITIES AND SERVICE LINES SHOWN ARE TAKEN FROM RECORD INFORMATION SUPPLIED BY THE UTILITY OWNER OR HORIZONTALLY LOCATED BY INDEPENDENT LOCATORS. CONTRACTOR IS RESPONSIBLE TO REPORT ANY CONFLICTS BETWEEN PLAN AND ACTUAL CONDITIONS PRIOR TO CONSTRUCTION. OWNER AND ENGINEER SHALL NOT BE RESPONSIBLE FOR THE ACCURACY OR COMPLETENESS OF INFORMATION OR DATA RELIED ON TO DEPICT UNDERGROUND FACILITIES. CONTRACTOR IS TO CONTACT OWNERS OF ALL UTILITIES AND SERVICE LINES WITHIN THE PROJECT AREA AND NOTIFY OF INTENT AT LEAST 1 WEEK PRIOR TO CONSTRUCTION. CONTRACTOR IS RESPONSIBLE FOR COORDINATING WITH FACILITY OWNERS. CONTRACTOR IS TO VERIFY THE EXACT LOCATION AND VERTICAL POSITIONING OF ALL PIPELINES, EXISTING UTILITIES, AND SERVICE LINES WITHIN THE PROJECT AREA WHETHER SHOWN ON THE PLANS OR NOT, AT LEAST 48 HOURS PRIOR TO CONSTRUCTION. CONTRACTOR IS TO MAINTAIN STRUCTURAL INTEGRITY OF ALL PIPELINES, ELECTRIC TRANSMISSION POLES AND LINES, PERMANENT AND TEMPORARY UTILITIES. CONTRACTOR IS RESPONSIBLE FOR ANY DAMAGE DONE TO EXISTING UTILITY FACILITIES, PAVEMENT, ETC. AS A RESULT OF CLEARING/EARTHWORK ACTIVITIES.

2. CONTRACTOR TO CONTACT TEXAS 811 48 HOURS PRIOR TO CONSTRUCTION. SPECIFIC ATTENTION SHOULD BE PAID TO PHONE LINES, VERIZON, GTE, ECT. SHOULD A CONFLICT ARISE BETWEEN THE PROPOSED CONSTRUCTION AND AN EXISTING UTILITY, CONTACT CEC 48 HOURS PRIOR TO CONSTRUCTION.

3. ALL DISTURBED AREAS NOT TO BE PAVED ARE TO HAVE ESTABLISHMENT OF GRASS AS OUTLINED IN THE DESCRIPTION OF CONTROLS, STABILIZATION PRACTICES NOTES.

4. ALL SWALE AREAS (BOTTOM WIDTHS & SIDE SLOPES) ARE TO BE PREPARED AND HYDROMULCHED FOR PERMANENT ESTABLISHMENT OF VEGETATION. PRIOR TO HYDROMULCHING OPERATIONS, CONTRACTOR TO REPLACE TOPSOIL TO A DEPTH OF 6". TOPSOIL IS TO BE DISKED TO A DEPTH OF AT LEAST 4" AND LIGHTLY COMPACTED. FINAL GRADES WITH ESTABLISHED VEGETATION SHALL BE AS CALLED OUT ON THE GRADING PLAN.

5. CONTRACTOR IS TO MAINTAIN EROSION CONTROL THROUGHOUT DURATION OF THE PROJECT AND UNTIL VEGETATION IS ESTABLISHED. INSURE SEDIMENT IS NOT TRANSPORTED DOWNSTREAM FROM PROJECT VIA HAY BALES, BRUSH PILE AND SILT FENCE INSTALLATIONS. IF EXCESSIVE EROSION IS OBSERVED IN THE FIELD, ADDITIONAL EROSION CONTROLS SHALL BE INSTALLED.

6. CONTRACTOR SHALL NOT ALLOW SEDIMENT TO ENTER THE DOWNSTREAM CHANNEL. CONTRACTOR SHALL BE RESPONSIBLE FOR CLEANING OF THE DOWNSTREAM CHANNEL AREAS AND RESTORING TO ORIGINAL CONDITION, INCLUDING ESTABLISHMENT OF REVEGETATION SHOULD CONSTRUCTION SEDIMENT BE FOUND OUTSIDE THE LIMITS OF CONSTRUCTION.

7. CONSTRUCTION EXITS AND ASSOCIATED SEDIMENT TRAPS ARE TO BE CLEANED REGULARLY. CONTRACTOR TO INSURE NO MUD IS TRACKED ON TO EXISTING CITY OR STATE ROADWAYS. IF TRACKING OCCURS CONTRACTOR IS TO INSURE THAT MUD IS NOT ALLOWED TO REMAIN BEYOND THE END OF EACH WORK DAY.

8. SEDIMENT IS TO BE CLEANED FROM SILT FENCING OR OTHER SEDIMENT CONTROL DEVICES WHEN DEPTH OF SEDIMENT REACHES +/–1/2 TOTAL HEIGHT OF DEVICE. CONTRACTOR IS TO INSURE EROSION CONTROL DEVICES ARE CONSISTENTLY INSTALLED AND PROPERLY MAINTAINED.

SITE DESCRIPTION

GENERAL LOCATION & DESCRIPTION:
OWNER INFORMATION: CAMPING MAXX C/O JERRY SHULMAN
6102 PINTO RUN
COLLEGE STATION, TEXAS 77845
(979) 485–2222

PROJECT NAME: SHULMAN INDUSTRIAL PARK
PROJECT LOCATION: EAST SIDE OF FM 2818 AND APPROXIMATELY 1800 FEET NORTH OF HIGHWAY 21

LATITUDE: N 30°40'27.38"
LONGITUDE: W 96°24'35.82"
TOTAL SITE AREA IS: 34.19 ACRES
AREA OF SITE EXPECTED TO BE DISTURBED: 3.37 ACRES

EXISTING SITE CONDITIONS:
LAND USE: VACANT
LAND COVER: GRASSED, SCATTERED TREES/BRUSH
AVERAGE GROUND SLOPE: 2 %
SCS CURVE NUMBER: 75
RATIONAL 'C' FACTOR: 0.30
RECEIVING WATERS: STILL CREEK
SEGMENT NO. OF CLASSIFIED WATER BODY: NO INFORMATION AVAILABLE
SOIL INFORMATION:
RAZER FINE SANDY LOAM, 0 TO 2 PERCENT SLOPES (RaB– USDA SOIL SURVEY)
ROBOO LOAMY FINE SAND, 1 TO 3 PERCENT SLOPES (RoB– USDA SOIL SURVEY)
TABOR FINE SANDY LOAM, 0 TO 2 PERCENT SLOPES (TaA– USDA SOIL SURVEY)
SANDY LOAM, 1 TO 3 PERCENT SLOPES (Sa– USDA SOIL SURVEY)
HYDROLOGIC SOIL GROUP– A/D

POST DEVELOPED SITE CONDITIONS:
LAND USE: INDUSTRIAL AND COMMERCIAL, DRAINAGE FACILITIES
PRIMARY STANDARD INDUSTRIAL CLASSIFICATION CODE (SIC): 1541
SECONDARY STANDARD INDUSTRIAL CLASSIFICATION CODE (SIC): 1542
SCS CURVE NUMBER: 88
RATIONAL 'C' FACTOR: 0.80

NATURE OF ACTIVITIES:
CLEARING OF EXISTING TREES & BRUSH; STRIPPING OF TOPSOIL; SITE CUT/FILL OPERATIONS, CONSTRUCTION OF BUILDING W/ ASSOCIATED PARKING, UTILITIES, REPLACEMENT OF TOPSOIL & REVEGETATION.

SEQUENCE OF MAJOR ACTIVITIES:
1. INSTALL SILT FENCE AT DOWNSTREAM LIMITS OF CONSTRUCTION & STOCK PILE AREAS
2. INSTALL ROCK CONSTRUCTION ENTRANCE
3. CLEAR SITE
4. EARTHWORK: SITE CUT/FILL GRADING, UTILITY INSTALLATION, PAVING OPERATIONS
5. AFTER ESTABLISHMENT OF GRASS, REMOVE ALL TEMPORARY EROSION CONTROL (SILT–FENCE); RE–SOD ALL AREAS NOT HAVING PERMANENT GRASS COVERAGE AS DEFINED.

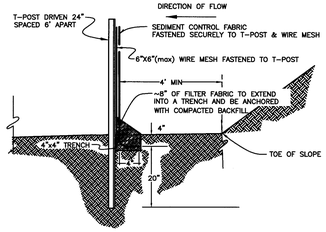

SILT FENCE INSTALLATION
NOT TO SCALE

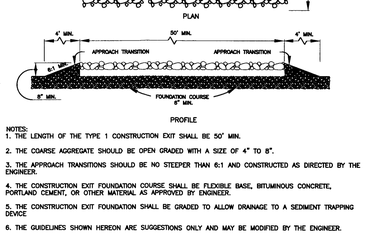

NOTES:
1. THE LENGTH OF THE TYPE 1 CONSTRUCTION EXIT SHALL BE 50' MIN.
2. THE COARSE AGGREGATE SHOULD BE OPEN GRADED WITH A SIZE OF 4" TO 8".
3. THE APPROACH TRANSITIONS SHOULD BE NO STEEPER THAN 6:1 AND CONSTRUCTED AS DIRECTED BY THE ENGINEER.
4. THE CONSTRUCTION EXIT FOUNDATION COURSE SHALL BE FLEXIBLE BASE, BITUMINOUS CONCRETE, PORTLAND CEMENT, OR OTHER MATERIAL AS APPROVED BY ENGINEER.
5. THE CONSTRUCTION EXIT FOUNDATION SHALL BE GRADED TO ALLOW DRAINAGE TO A SEDIMENT TRAPPING DEVICE
6. THE GUIDELINES SHOWN HEREON ARE SUGGESTIONS ONLY AND MAY BE MODFIED BY THE ENGINEER.

TXDOT TYPE 1–CONSTRUCTION ENTRANCE/EXIT
NOT TO SCALE

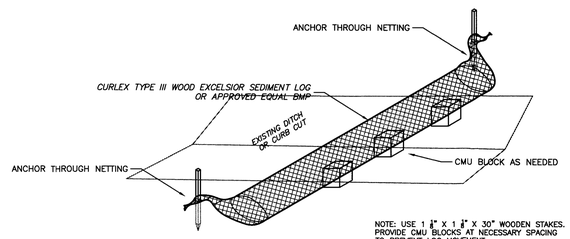

WOOD EXCELSIOR LOG
NOT TO SCALE

LEGEND:

TOTAL AREA DISTURBED: CLEARING & GRUBBING: ENTIRELY REMOVE ALL MATERIALS WITHIN LIMITS. REMOVE ALL UNDERGROUND ELEMENTS INCLUDING BUT NOT LIMITED TO TREE ROOTS, STUMPS, CONCRETE, ROCK, ECT...	3.37 ACRES
SILT FENCE	SF SF
EXISTING CONTOUR	285
COMMON BERMUDA GRASS (Cynodon dactylon)	2.36 ACRES
LIMITS OF DISTURBANCE	
ROCK CONSTRUCTION ENTRANCE/EXIT	
100 YEAR FLOODWAY	
100 YEAR FLOODPLAIN	

DON BURDEN CONSULTING ENGINEERS
4101 S. TEXAS AVE. SUITE A
BRYAN, TEXAS 77802
TEL: (979) 846-6212
FAX: (979) 846-8252
REGISTRATION #F-2214
CEC
SAN ANTONIO / LAREDO
BRYAN / COLLEGE STATION

DESIGNED BY: SJH
DRAWN BY: SJH
APPROVED: AAP
JOB NO: E0559200

THIS DOCUMENT IS RELEASED UNDER THE AUTHORITY OF ALFRED A. PAINE, P.E. 97221 ON 9/7/2016 FOR THE PURPOSE OF INTERIM REVIEW. –NOT FOR CONSTRUCTION–

REV	DATE	DESCRIPTION

CAMPING MAXX

SHULMAN INDUSTRIAL PARK (34.19 ACRES)
PHASE ONE
EROSION CONTROL PLAN
BRYAN, BRAZOS COUNTY, TEXAS

SHEET NO.
C2.1

C:\data\BCS\Proj_2016\E0559200_SHULMAN INDUSTRIAL PARK – FM 2818\cadd\Engineering\E0559200 – C2.1 Erosion Control Plan.dwg – September 7, 2016

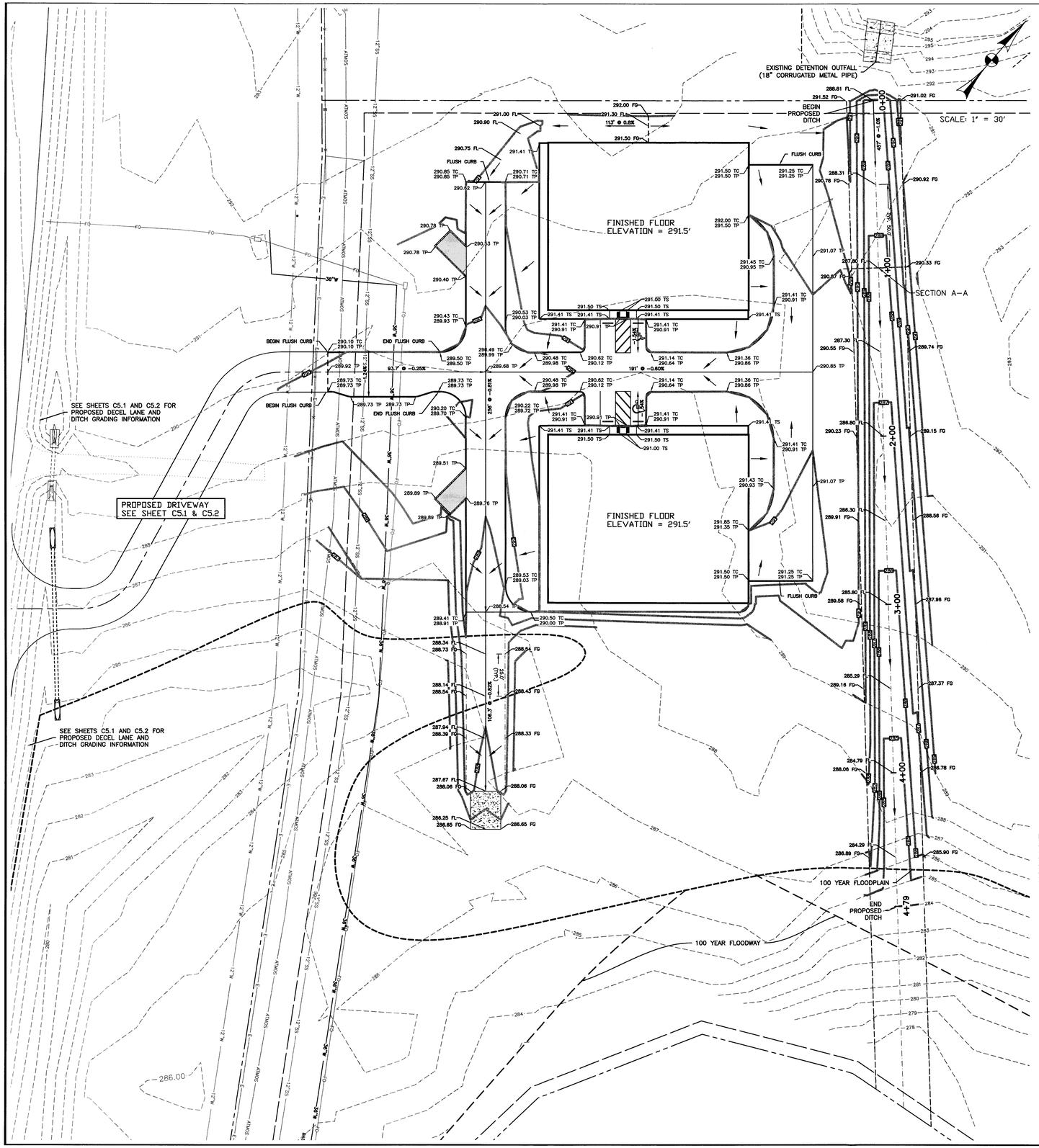

LEGEND

- PROPOSED CONTOUR
- EXISTING CONTOUR
- EXISTING BACK OF CURB
- EXISTING SANITARY SEWER
- EXISTING SANITARY SEWER MANHOLE
- EXISTING OVERHEAD ELECTRIC LINE
- EXISTING WATER LINE
- EXISTING GAS LINE
- PROPERTY LINE
- GRADE BREAK
- PROPOSED BACK OF CURB
- FLOWLINE ARROWS
- DIRECTION OF FLOW

TC = TOP OF CURB
TP = TOP OF PAVEMENT
FL = FLOW LINE
TS = TOP OF SIDEWALK
FG = FINISHED GRADE

EARTHWORK NOTES

1. PRIOR TO PREPARATION OF SUBGRADE AND ANY FILL OPERATIONS, THE CONTRACTOR MUST CLEAR & GRUB OR OTHERWISE STRIP AREA OF TOP SOIL TO EXISTING, STABLE MATERIAL. SURFACES EXPOSED AFTER THE STRIPPING OF VEGETATION AND REMOVAL OR ANY SURFICIAL SOILS SHALL THEN BE PROOF ROLLED TO LOCATE UNSTABLE OR NON-UNIFORM AREAS. ROLLING EQUIPMENT SHALL CONSIST OF PNEUMATIC TIRED ROLLER WITH GROSS LOADING TO BE AS NECESSARY TO PRODUCE SURFACE LOADING OF 30 LBS/SQ IN. CONTRACTOR TO OVER EXCAVATE UNSTABLE OR NON-UNIFORM AREAS, REMOVING AND REPLACING MATERIAL WITH NATIVE OR IMPORT GENERAL FILL MATERIAL COMPACTED TO 98% STD. PROCTOR (ASTM D-698) AT A MOISTURE CONTENT OF OPTIMUM TO +3% OF OPTIMUM. ONLY AS MUCH TOPSOIL AS IS REQUIRED TO PLACE IN RIGHT OF WAY OR OTHER DISTURBED AREAS OF THE SITE FILL IS TO BE STOCKPILED FOR USE IN FINISHED GRADING. REMAINDER OF TOP SOIL IS TO BE REMOVED & DISPOSED OF OFF SITE.

CHARACTERISTICS OF THE SUBGRADE LAYER SHOULD BE VERIFIED BY IN-PLACE DENSITY TESTS. THE TESTS SHOULD BE PERFORMED AT AN AVERAGE RATE OF ONE TEST FOR EVERY 2,000 SQUARE FEET OF BUILDING PAD SUBGRADE AREA AND EVERY 4,000 SQUARE FEET OF PAVING SUBGRADE AREA.

2. PRIOR TO PREPARATION OF SUBGRADE AND ANY FILL OPERATIONS, THE CONTRACTOR SHALL COORDINATE WITH TESTING LAB TO ENSURE ALL TOPSOIL AND UNSUITABLE MATERIAL HAS BEEN REMOVED.

3. FILL PLACED OUTSIDE OF THE BUILDING PAD AREA IN AREAS PLANNED TO BE PAVED MAY CONSIST OF A UNIFORM MATERIAL WITH LOW TO MODERATE PLASTICITY THAT HAS PI VALUES OF BETWEEN 19 AND 30, INCLUSIVE, ALONG WITH A MAXIMUM LL VALUE OF 49. THE FILL MATERIALS SHOULD GENERALLY CLASSIFY AS SC OR CL TYPE SOILS UNDER THE USCS OR AS SC, CL OR CM TYPE SOILS UNDER THE ORIGINALLY PROPOSED USCS. SOILS CONTAINING AN EXCESSIVE AMOUNT OF SILT (I.E., GREATER THAN APPROXIMATELY 20 TO 25 PERCENT) WITHOUT A CORRESPONDING PERCENTAGE OF CLAYS TO "BALANCE" THE SILTS, SHOULD NOT BE USED.

FILL TO BE COMPACTED TO 98% OF THE MAXIMUM DENSITY AS DETERMINED BY ASTM D-698 AT A MOISTURE CONTENT OF OPTIMUM TO +3% OF OPTIMUM. FILL TO BE PLACED IN 6" LIFTS.

4. TOPSOIL SHALL BE STOCKPILED ONLY AS NECESSARY FOR REPLACEMENT IN NON PAVED AREAS. MAXIMUM HEIGHT SHALL NOT EXCEED 10', AND THE SIDE SLOPE SHALL NOT BE STEEPER THAN 3:1. EXCESS TOPSOIL IS TO BE HAULED OFF SITE AND DISPOSED OF BY THE CONTRACTOR.

5. SUB-GRADE: FINAL COMPACTION OF THE SUB-GRADE TO BE 98% OF THE MAXIMUM DENSITY OF THE MIXTURE AS DETERMINED BY ASTM D-698 AT A MOISTURE CONTENT BETWEEN OPTIMUM TO +3% OF OPTIMUM.

6. STABILIZATION: SUB-GRADE SHALL BE LIME STABILIZED AS RECOMMENDED A GEOTECHNICAL INVESTIGATION TO A DEPTH OF NOT LESS THAN 6". APPLICATION RATE SHALL BE ASSUMED 6% BY LIME WEIGHT OF THE SUB-GRADE FOR DESIGN PURPOSES. MECHANICAL MEANS SHALL BE USED TO INSURE LIME IS THOROUGHLY MIXED IN WITH THE SUB-GRADE. COMPACT THE LIME/SOIL MIXTURE TO A DENSITY OF AT LEAST 95% STANDARD PROCTOR (ASTM D-698) AT A MOISTURE CONTENT BETWEEN OPTIMUM TO 4% ABOVE OPTIMUM.

7. TESTING REQUIREMENTS:
THE OWNER SHALL OBTAIN AN INDEPENDENT TESTING LABORATORY TO CONDUCT ALL MATERIALS/COMPACTION TESTING. CONTRACTOR IS RESPONSIBLE TO NOTIFY AND COORDINATE WITH LABORATORY IN ADVANCE OF WHEN OPERATIONS WILL BE PERFORMED. INITIAL TESTING SHALL BE PAID FOR BY THE OWNER. FAILED TESTS AND RE-TESTS SHALL BE PAID FOR BY THE CONTRACTOR. WORK WILL NOT BE ACCEPTABLE FOR PAYMENT WITHOUT PASSED TEST RESULTS. COPIES OF RESULTS TO BE DELIVERED TO OWNER AND CIVIL ENGINEERING CONSULTANTS.

SUB-GRADE MATERIAL: OPTIMUM MOISTURE/DENSITY RELATIONSHIP TO BE DETERMINED AT RATE OF ONE SAMPLE PER MATERIAL ENCOUNTERED, IN PLACE DENSITY & MOISTURE CONTENT TESTS TO BE TAKEN AT A RATE OF 1 (MINIMUM) FOR EVERY 250 SY FOR EACH 6" OF COMPACTED THICKNESS.

LIME STABILIZATION: A LIME SERIES SHALL BE RUN TO DETERMINE THE EXACT AMOUNT OF LIME TO BE ADDED TO THE SUBGRADE PRIOR TO COMMENCEMENT OF LIME STABILIZATION.

LIME STABILIZED SUB-GRADE: IN-PLACE DENSITY & MOISTURE CONTENT TESTS TO BE TAKEN AT A RATE OF (MINIMUM) FOR EVERY 250 SY FOR EACH 6" OF COMPACTED THICKNESS.

8. FINISHED GRADING: CONTRACTOR TO GRADE TO 6" BELOW FINISHED GRADIES IN ALL AREAS TO BE REVEGETATED. ALL AREAS ARE TO BE NEATLY GRADED TO DRAIN. SPREAD AT LEAST 6" OF TOP SOIL, DISK AND HYDROMULCH FOR PERMANENT VEGETATION. ASSURE POSITIVE DRAINAGE ACROSS ENTIRE SITE AND ALL REGRADED GRASSED AREAS.

9. THE UPPER PORTION OF UTILITY EXCAVATIONS SHOULD BE BACKFILLED WITH PROPERLY COMPACTED CLAY SOILS TO MINIMIZE INFILTRATION OF SURFACE WATER. A CLAY "PLUG" SHOULD BE PROVIDED IN THE TRENCH ON THE EXTERIOR OF THE BUILDING TO PREVENT WATER FROM GAINING ACCESS ALONG THE TRENCH TO THE SUBGRADE BENEATH THE STRUCTURE. THIS PLUG SHALL EXTEND TWO FEET BEYOND THE PIPE FACE IN ALL DIRECTIONS, AND BE A MINIMUM OF TWO FEET THICK.

A GEOTECHNICAL INVESTIGATION OF THE SITE SURFICIAL & SUBSURFACE SOILS HAS NOT BEEN RECEIVED BY CIVIL ENGINEERING CONSULTANTS. TO ENSURE PROPER SUBGRADE PREPARATION, PRIOR TO CONSTRUCTION, IT IS RECOMMENDED THAT A GEOTECHNICAL INVESTIGATION BE OBTAINED BY THE OWNER FROM AN INDEPENDENT GEOTECHNICAL CONSULTANT. A GEOTECHNICAL ENGINEER'S RECOMMENDATIONS REGARDING SUBGRADE SUITABILITY, STRENGTH, AND ANY NECESSARY STABILIZATION SHOULD BE OBTAINED IN A CERTIFIED REPORT.

THE FOLLOWING EARTHWORK & PAVEMENT NOTES ARE TYPICAL REQUIREMENTS FOR THIS AREA. ACTUAL REQUIREMENTS SHALL BE AS OUTLINED IN THE GEOTECHNICAL CONSULTANT.

GRADING CONSTRUCTION NOTES:

1. FILL MATERIAL USED TO ACHIEVE GRADE IN AREAS TO RECEIVE PAVEMENT SHALL BE COMPACTED TO AT LEAST 95% OF THE MAXIMUM DRY DENSITY AS DETERMINED BY THE STANDARD PROCTOR TEST, (ASTM D698), AT A MOISTURE CONTENT FROM OPTIMUM MOISTURE CONTENT TO 4% ABOVE THE OPTIMUM MOISTURE CONTENT. AREAS OUTSIDE OF THE STREET AREAS TO BE PLACED SHALL BE COMPACTED TO 95% OF THE MAXIMUM DRY DENSITY.

2. DENSITY CONTROLLED FILL – IN ALL AREAS THAT RECEIVE FILL MATERIAL IN EXCESS OF 6" SHALL MEET THE FOLLOWING REQUIREMENTS:
   a. ALL PLANT MATERIAL SHALL BE CLEARED AND REMOVED FROM THE AREA.
   b. EXISTING TOPSOIL SHALL BE REMOVED AND STOCKPILED FOR FINAL TOP DRESSING.
   c. FILL MATERIAL SHALL BE PLACED IN 6" LIFTS AND COMPACTED TO A DENSITY OF 98% OF STD PROCTOR (ASTM D698) WITH MOISTURE CONTENT BETWEEN OPTIMUM AND 4% ABOVE OPTIMUM.

5. THE EXISTING TOPOGRAPHY SHOWN IS FROM FIELD SURVEY DATA COLLECTED BY CIVIL ENGINEERING CONSULTANTS ON 07-09-2016.

6. ALL DISTURBED AREAS WITHIN RIGHT OF WAY SHALL BE RESEEDED IN ACCORDANCE WITH CURRENT TXDOT SPECIFICATION ITEMS 164/166 IMMEDIATELY FOLLOWING CONSTRUCTION.

7. CONTRACTOR RESPONSIBLE FOR IMPLEMENTING AND ADHERING TO TXDOT TRAFFIC CONTROL REQUIREMENTS. SEE TXDOT TRAFFIC CONTROL PLAN CONVENTIONAL ROAD SHOULDER WORK TCP(2-4)-12.

CONSTRUCTION MATERIALS TESTING

1. THE OWNER SHALL OBTAIN AN INDEPENDENT TESTING LABORATORY TO CONDUCT ALL MATERIALS/COMPACTION TESTING. CONTRACTOR IS RESPONSIBLE TO NOTIFY AND COORDINATE WITH LABORATORY IN ADVANCE OF WHEN OPERATIONS WILL BE PERFORMED. INITIAL TESTING SHALL BE PAID FOR BY THE OWNER. FAILED TESTS AND RE-TESTS SHALL BE PAID FOR BY THE CONTRACTOR. WORK WILL NOT BE ACCEPTABLE FOR PAYMENT WITHOUT PASSED TEST RESULTS. COPIES OF RESULTS TO BE DELIVERED TO OWNER AND CIVIL ENGINEERING CONSULTANTS.

2. SUB-GRADE MATERIAL / GENERAL FILL: OPTIMUM MOISTURE/DENSITY RELATIONSHIP TO BE DETERMINED AT RATE OF ONE SAMPLE PER MATERIAL ENCOUNTERED. IN-PLACE DENSITY & MOISTURE CONTENT TESTS TO BE TAKEN AT A RATE OF 1 (MINIMUM) FOR EVERY 250 SY FOR EACH 6" OF COMPACTED THICKNESS.

3. SUBGRADE STABILIZATION: A LIME OR CEMENT SERIES SHALL BE RUN TO DETERMINE THE EXACT AMOUNT OF LIME OR CEMENT TO BE ADDED TO THE SUBGRADE PRIOR TO COMMENCEMENT OF STABILIZATION. IN-PLACE DENSITY & MOISTURE CONTENT TESTS TO BE TAKEN AT A RATE OF 1(MINIMUM) FOR EVERY 250 SY FOR EACH 6" OF COMPACTED THICKNESS.

4. CONCRETE: TEST CYLINDERS TO BE TAKEN AT A RATE OF 1 SET OF 3 PER 100 CY OF CONCRETE PLACED OR A MINIMUM OF 1 SET OF 3 PER STRUCTURE AT TIME OF POUR.

5. THE PERFORMANCE OF FOUNDATION SYSTEMS AND PAVEMENTS ARE HIGHLY DEPENDENT UPON THE QUALITY OF CONSTRUCTION. COMPACTION TESTING OF FILL MATERIAL AND CONCRETE STRENGTH TESTS ARE REQUIRED BY THE INTERNATIONAL BUILDING CODE.

GENERAL NOTES:

1. ALL UTILITIES AND SERVICE LINES SHOWN ARE TAKEN FROM BEST AVAILABLE RECORD INFORMATION BASED ON CONSTRUCTION UTILITY MAP DOCUMENTS OBTAINED BY CIVIL ENGINEERING CONSULTANTS (CEC) FROM CITY & INDEPENDENT AGENCIES AND/OR ABOVE GROUND FIELD EVIDENCE. SHOWN POSITIONS MAY NOT REPRESENT AS-BUILT POSITIONS.

CONTRACTOR IS RESPONSIBLE TO REPORT ANY CONFLICTS BETWEEN PLAN AND ACTUAL CONDITIONS PRIOR TO CONSTRUCTION OF WORK ELEMENT AFFECTED. OWNER AND ENGINEER SHALL NOT BE RESPONSIBLE FOR THE ACCURACY OR COMPLETENESS OF INFORMATION OR DATA RELIED ON TO DEPICT UNDERGROUND FACILITIES. CONTRACTOR IS TO CONTACT OWNERS OF ALL UTILITIES AND SERVICE LINES WITHIN THE PROJECT AREA AND NOTIFY OF INTENT AT LEAST 1 WEEK PRIOR TO CONSTRUCTION. CONTRACTOR IS RESPONSIBLE FOR COORDINATING WITH FACILITY OWNERS. CONTRACTOR IS TO VERIFY THE EXACT LOCATION AND VERTICAL POSITIONING OF ALL PIPELINES, EXISTING UTILITIES, AND SERVICE LINES WITHIN THE PROJECT AREA WHETHER SHOWN ON THE PLANS OR NOT, AT LEAST 48 HOURS PRIOR TO CONSTRUCTION. CONTRACTOR IS RESPONSIBLE FOR COORDINATING WITH FACILITY OWNERS AND ANY RELOCATION, REMOVAL, AND INSTALLATION, OR ADJUSTMENTS TO ALL EXISTING FACILITIES REQUIRED FOR PROSECUTION OF THE WORK. CONTRACTOR IS TO MAINTAIN STRUCTURAL INTEGRITY OF ALL PIPELINES, ELECTRIC TRANSMISSION POLES AND LINES, PERMANENT AND TEMPORARY UTILITIES. CONTRACTOR IS RESPONSIBLE FOR ANY DAMAGE DONE TO EXISTING UTILITY FACILITIES, PAVEMENT, ETC. AS A RESULT OF CONSTRUCTION ACTIVITIES.

CONTRACTOR TO CONTACT TEXAS811.96 HOURS PRIOR TO CONSTRUCTION. SPECIFIC ATTENTION SHOULD BE PAID TO FRANCHISE UTILITIES AS WELL AS OIL AND GAS PIPELINE COMPANIES. SHOULD A CONFLICT ARISE BETWEEN THE PROPOSED CONSTRUCTION AND AN EXISTING UTILITY, CONTACT CEC 48 HOURS PRIOR TO CONSTRUCTION.

2. CONTRACTOR IS TO MAINTAIN AND ENSURE INTEGRITY OF ALL EXISTING UTILITIES. CLOSE ATTENTION IS TO BE PAID TO ANY EXISTING POWER, TELEPHONE, & FIBER OPTIC LINES & POLES.

3. UNLESS OTHERWISE DIRECTED BY THE OWNER, ALL MATERIALS AND DEBRIS DEMOLISHED OR REMOVED SHALL BECOME THE PROPERTY OF THE CONTRACTOR AND SHALL BE REMOVED FROM THE SITE AND DISPOSED OF IN A MANNER SATISFACTORY TO THE OWNER & ENGINEER.

4. CONTRACTOR SHALL PREVENT TRANSPORT OF SEDIMENT TO ADJACENT PROPERTIES AND PUBLIC RIGHT OF WAYS AND IS RESPONSIBLE FOR CLEANUP IF SUCH OCCURS. CONTRACTOR IS TO INSURE NO CONSTRUCTION DEBRIS OR MUD IS TRACKED ONTO OR DISCHARGED TO ANY PUBLIC OR PRIVATE STREETS OR LAND AND IS RESPONSIBLE FOR CLEANUP WITHIN 24HOURS. CONTRACTOR IS TO MAKE USE OF BEST MANAGEMENT PRACTICES TO PREVENT SEDIMENT FROM LEAVING THE SITE OR ENTERING EXISTING STORM SEWER OR CREEK AREAS. CONTRACTOR SHALL MAINTAIN EROSION CONTROL THROUGHOUT CONSTRUCTION PERIOD AND UNTIL GRASS IS ESTABLISHED.

5. CONTRACTOR IS TO BROADCAST SEED ALL DISTURBED AREAS FOR RE-ESTABLISHMENT OF VEGETATION WITH GRASS SEED MIX AS INDICATED IN THE SWP3 PLAN OR LANDSCAPE PLAN (DEPENDING ON LOCATION). CONTRACTOR TO DISK AREAS TO BE SEEDED TO A DEPTH OF 6". CONTRACTOR TO GUARANTEE COVERAGE AND ESTABLISHMENT OF GRASS FOR A PERIOD OF 6 MOS. COVERAGE SHALL BE DEFINED AS 95% OF THE PLANTED AREA WITH UNIFORM COVERAGE OF GRASS GREATER THAN 1" IN HEIGHT WITH NO BARE SPOTS GREATER THAN 2 SF.

6. LIMITS OF WORK: CONTRACTOR IS TO CONFINE ALL WORK TO OWNER'S PROPERTY. NO CONSTRUCTION ACTIVITY IS ALLOWED ON OR THROUGH PRIVATE PROPERTY UNLESS COVERED BY A PUBLIC UTILITY EASEMENT OR OTHER DOCUMENTED AGREEMENT.

7. CONTRACTOR SHALL BE RESPONSIBLE FOR THE CONTAINMENT AND PROPER DISPOSAL OF ALL LIQUID AND SOLID WASTE ASSOCIATED WITH THIS PROJECT. THE CONTRACTOR SHALL USE ALL MEANS NECESSARY TO PREVENT THE OCCURRENCE OF WIND BLOWN LITTER FROM THE PROJECT SITE.

PROPOSED DITCH PROFILE

Station 0+00 – 4+80

SCALE:
1" = 60' HORIZONTAL
1" = 6' VERTICAL

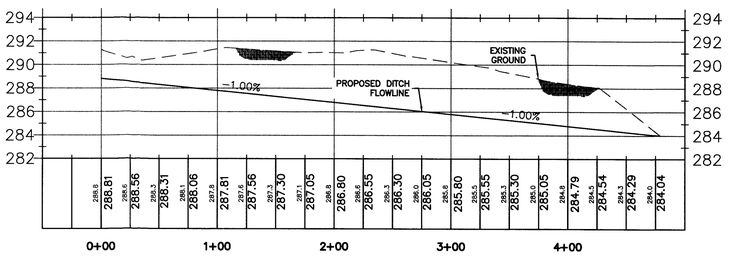

SECTION A-A

SCALE:
1" = 10' HORIZONTAL
1" = 1' VERTICAL

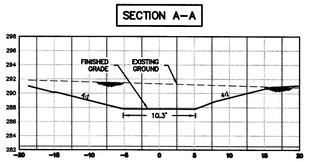

DESIGNED BY: SJH
DRAWN BY: SJH
APPROVED: AAP
JOB NO: E00592000

DON DURDEN, INC
d.b.a. CIVIL ENGINEERING CONSULTANTS
4101 S. TEXAS AVE., SUITE A
BRYAN, TEXAS 77802
PH: (979) 846-3252
FAX: (979) 846-8252
REGISTRATION #F-2214
SAN ANTONIO / LAREDO
BRYAN / COLLEGE STATION

THIS DOCUMENT IS RELEASED UNDER THE AUTHORITY OF ALFRED A. PAINE, P.E. 97221 ON 9/7/2016 FOR THE PURPOSE OF INTERIM REVIEW. -NOT FOR CONSTRUCTION-

REV	DATE	DESCRIPTION

CAMPING MAXX

SHULMAN INDUSTRIAL PARK (34.19 ACRES)
PHASE ONE
GRADING PLAN
BRYAN, BRAZOS COUNTY, TEXAS

SHEET NO.
C3.1

C:\data\GCS\Proj_2016\E00592000_SHULMAN INDUSTRIAL PARK - FM 2818\cadd\Engineering\E00592000 - C3.1 Grading Plan.dwg - September 7, 2016

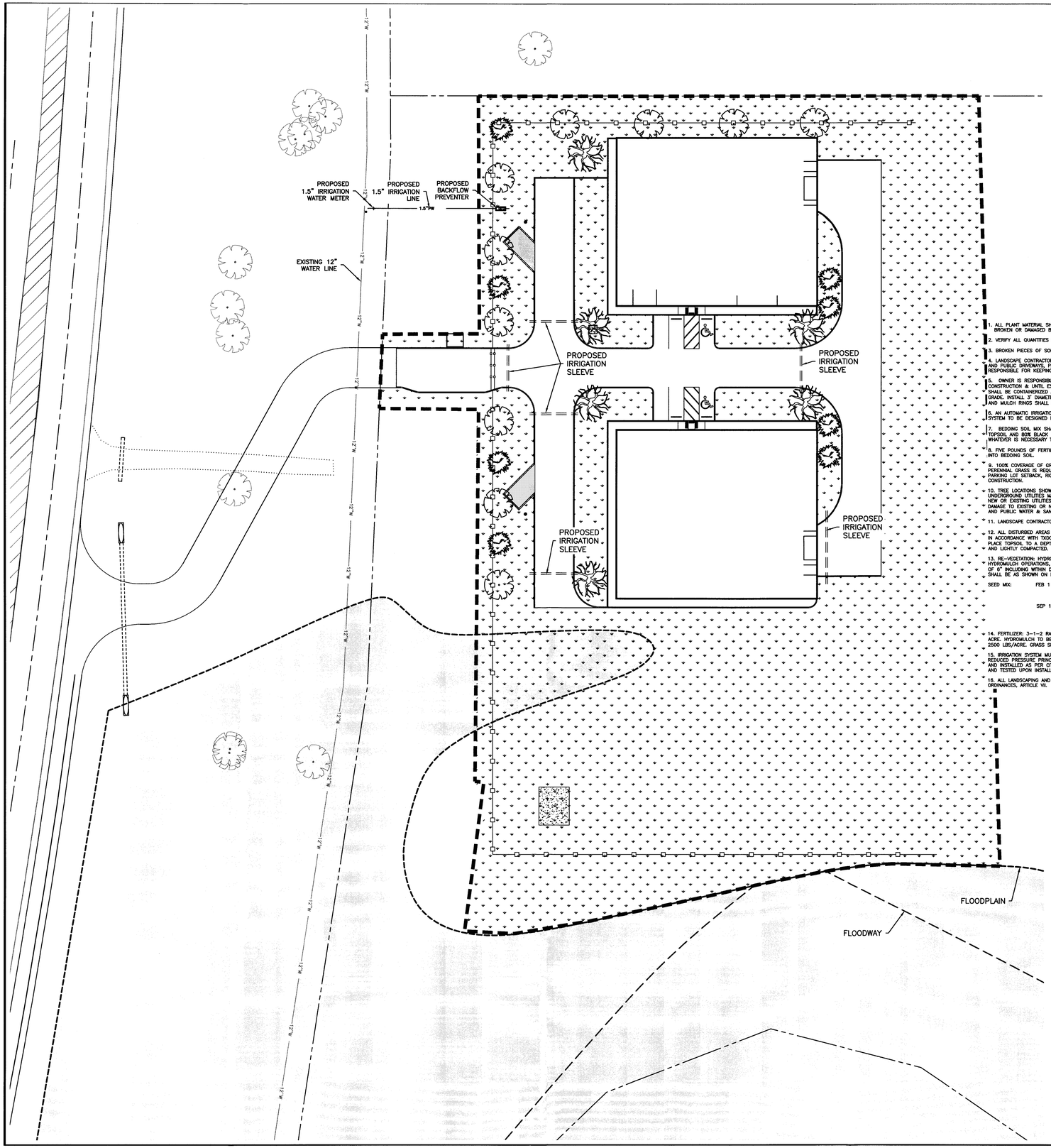

SCALE: 1" = 30'

PLANT LIST:

KEY	QUANTITY	SIZE	COMMON NAME (BOTANICAL NAME)	SF VALUE	TOTAL SF	COMMENTS
			CANOPY TREES:			
	10	3.5" CAL.	Live Oak (container) (Quercus virginiana)	350	3500	3.5" CALIPER MINIMUM AT 12" ABOVE GRADE. MATURE CROWN HEIGHT GREATER THAN 20'
	6	3.5" CAL.	Chinese Pistache (Pistacia chinensis)	350	2100	3.5" CALIPER MINIMUM AT 12" ABOVE GRADE MATURE CROWN HEIGHT GREATER THAN 20'
			NON-CANOPY TREES:			
	8	1.25" CAL.	Crape Myrtle (container) (Lagerstroemia indica) "Watermelon Red"	150	1200	1.25" CALIPER, MINIMUM AT 12" ABOVE GRADE. MAX HEIGHT LESS THAN 20'
			TURF GRASS:			
	101,059	SF	COMMON BERMUDA GRASS (Cynodon dactylon)	10/100 SF	*1181	HYDROMULCH

*1181 SF = 15% MAX ALLOWANCE OF TOTAL LANDSCAPING POINTS FOR GROUNDCOVER

1. ALL PLANT MATERIAL SHALL BE PRUNED / SHAPED AFTER INSTALLATION TO REMOVE ANY BROKEN OR DAMAGED BRANCHES AND TO GIVE UNIFORMITY OF SHAPE.

2. VERIFY ALL QUANTITIES BEFORE INSTALLATION.

3. BROKEN PIECES OF SOD (SMALLER THAN 8" SQUARE) ARE NOT ACCEPTABLE.

4. LANDSCAPE CONTRACTOR IS RESPONSIBLE FOR CLEARING ANY DIRT OR MUD FROM PRIVATE AND PUBLIC DRIVEWAYS, PAVEMENT, STREETS, ETC. LANDSCAPE CONTRACTOR IS ALSO RESPONSIBLE FOR KEEPING THE SITE CLEAN DURING CONSTRUCTION AND PLANT INSTALLATION.

5. OWNER IS RESPONSIBLE FOR MAINTAINING EROSION & SEDIMENT CONTROL AFTER CONSTRUCTION & UNTIL ESTABLISHMENT OF VEGETATION ALL PROPOSED "NEW CANOPY TREES" SHALL BE CONTAINERIZED AND HAVE A MINIMUM TRUNK DIAMETER OF 3" MEASURED 12" ABOVE GRADE. INSTALL 3" DIAMETER MULCH RINGS (3" THICK) AROUND ALL TREES. ALL FLOWER BEDS AND MULCH RINGS SHALL BE TOP DRESSED WITH A 2" LAYER OF BLACK HUMUS.

6. AN AUTOMATIC IRRIGATION SYSTEM WILL COVER THE ENTIRE LANDSCAPED AREAS. IRRIGATION SYSTEM TO BE DESIGNED BY OTHERS & SUBMITTED TO CITY FOR APPROVAL.

7. BEDDING SOIL MIX SHALL BE A RAISED (ABOVE GRADE) 8" LAYER OF 20% SANDY LOAM TOPSOIL AND 80% BLACK HUMUS (BLACK VELVET). PROVIDE POSITIVE DRAINAGE AND DO WHATEVER IS NECESSARY TO ACCOMMODATE FINISH FLOOR ELEVATIONS, WEEP HOLES, ETC.

8. FIVE POUNDS OF FERTILIZER (3-2-1 RATIO) PER 1000 SQ. FT. SHALL BE INCORPORATED INTO BEDDING SOIL.

9. 100% COVERAGE OF GROUND COVER, DECORATIVE PAVING, DECORATIVE ROCK, OR A PERENNIAL GRASS IS REQUIRED IN PARKING LOT ISLANDS, SWALES, AND DRAINAGE AREAS, THE PARKING LOT SETBACK, RIGHTS-OF-WAY, AND ADJACENT PROPERTY DISTURBED DURING CONSTRUCTION.

10. TREE LOCATIONS SHOWN ARE APPROXIMATE. PRIOR TO INSTALLATION, HAVE ALL UNDERGROUND UTILITIES MARKED. ADJUST TREE LOCATIONS AS NEEDED TO AVOID DAMAGE TO NEW OR EXISTING UTILITIES OR IRRIGATION LINES. CONTRACTOR IS RESPONSIBLE FOR ANY DAMAGE TO EXISTING OR NEW FACILITIES. MAINTAIN 10' SEPARATION BETWEEN CANOPY TREES AND PUBLIC WATER & SANITARY SEWER LINES.

11. LANDSCAPE CONTRACTOR TO GUARANTEE ALL PLANT MATERIAL FOR 1 YEAR.

12. ALL DISTURBED AREAS SHALL BE HYDROMULCH SEEDED (AS PER EROSION CONTROL PLAN) IN ACCORDANCE WITH TXDOT 162/164. PRIOR TO FINAL REVEGETATION, CONTRACTOR IS TO PLACE TOPSOIL TO A DEPTH OF 6". TOPSOIL IS TO BE DISKED TO A DEPTH OF AT LEAST 4" AND LIGHTLY COMPACTED.

13. RE-VEGETATION: HYDROMULCH: GRASS SEED MIX TO BE AS SPECIFIED BELOW. PRIOR TO HYDROMULCH OPERATIONS, CONTRACTOR TO REPLACE AND CONSOLIDATE TOPSOIL TO A DEPTH OF 6" INCLUDING WITHIN DITCH SECTIONS. FINAL GRADES WITH ESTABLISHED VEGETATION SHALL BE AS SHOWN ON PLANS. HYDROMULCH TO BE INSTALLED PER TXDOT ITEM 164.

SEED MIX:
FEB 1 – MAY 15:
GREEN SPRANGLETOP 0.3 LB. PLS/AC.
BERMUDA GRASS 2.4 LB. PLS/AC.
SEP 1 – NOV 30:
TALL FESCUE 4.5 LB./AC.
OATS 24 LB./AC.
WHEAT 34 LB./AC.

14. FERTILIZER: 3-1-2 RATIO FERTILIZER W/ SULFUR & TRACE ELEMENTS @ 350 LBS PER ACRE. HYDROMULCH TO BE "EXCEL FIBERMULCH II W/ TACKIFIER – APPLICATION RATE OF 2500 LBS/ACRE. GRASS SEED AND FERTILIZER INCORPORATED INTO SLURRY.

15. IRRIGATION SYSTEM MUST BE PROTECTED BY EITHER A PRESSURE VACUUM BREAKER, A REDUCED PRESSURE PRINCIPLE BACK FLOW DEVICE, OR A DOUBLE-CHECK BACK FLOW DEVICE, AND INSTALLED AS PER CITY ORDINANCE 2394. ALL BACK FLOW DEVICES SHALL BE INSTALLED AND TESTED UPON INSTALLATION AS PER CITY ORDINANCE 2394.

16. ALL LANDSCAPING AND IRRIGATION SYSTEMS TO COMPLY WITH CITY OF BRYAN CODE OF ORDINANCES, ARTICLE VII.

SITE LANDSCAPE CALCULATIONS

LANDSCAPING REQUIREMENTS:

POINT CALCULATIONS:
TOTAL LOT AREA: 1.21 ACRES = 52,516 SF
REQUIRED LANDSCAPING: 15% OF DEVELOPED AREA (TOTAL PHASE 1 LOT AREA)
52,516 SF X 15% = 7878 SF

POINTS REQUIRED: 7878 SF

PROVIDED LANDSCAPING:
NEW CANOPY TREES (Container)
16 @ 350 SF (3" CAL. minimum) = 5600 SF

NEW NON-CANOPY TREES (Container)
8 @ 150 SF (1.5" CAL. minimum) = 1200 SF

GRASSES & GROUNDCOVER
7878 SF X .15 (MAXIMUM ALLOWED) = 1181 SF

TOTAL POINTS PROVIDED: 7,981 SF

LEGEND:

TOTAL AREA DISTURBED: CLEARING & GRUBBING: ENTIRELY REMOVE ALL MATERIALS WITHIN LIMITS. REMOVE ALL UNDERGROUND ELEMENTS INCLUDING BUT NOT LIMITED TO TREE ROOTS, STUMPS, CONCRETE, ROCK, ECT... — 3.37 ACRES

COMMON BERMUDA GRASS (Cynodon dactylon) — 2.36 ACRES

LIMITS OF DISTURBANCE

100 YEAR FLOODWAY

100 YEAR FLOODPLAIN

EXISTING TREE

END ISLAND CALCULATIONS

SF PROVIDED — 230
SF REQUIRED — 180

PROVIDED: 2,810 SF
(–) END ISLAND REQUIRED: 8 X 180 SF (–) 1,440SF
EXCESS ISLAND AREA: 1,370 SF

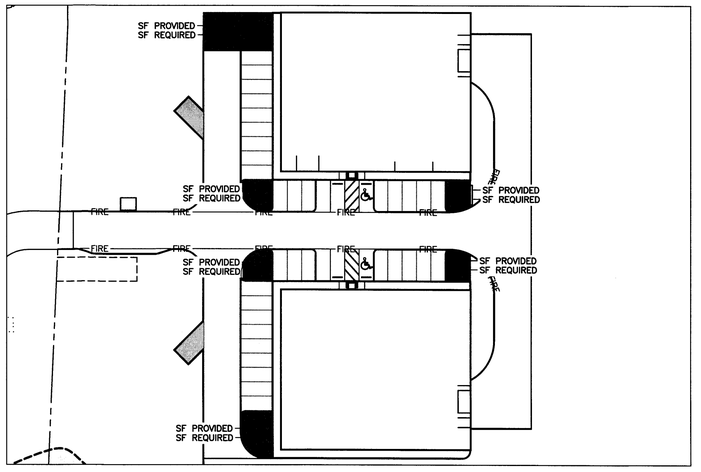

DESIGNED BY: SJH
DRAWN BY: SJH
APPROVED: AAP
JOB NO: E0559200

DON DURDEN, INC
d.b.a. CIVIL ENGINEERING CONSULTANTS
4101 S. TEXAS AVE. SUITE A
BRYAN, TEXAS 77802
TEL: (979) 846-6212
FAX: (979) 846-6252
REGISTRATION #F-2214
SAN ANTONIO / LAREDO
BRYAN / COLLEGE STATION

THIS DOCUMENT IS RELEASED UNDER THE AUTHORITY OF ALFRED A. PAINE, P.E. 97221 ON 9/7/2016 FOR THE PURPOSE OF INTERIM REVIEW. —NOT FOR CONSTRUCTION—

REV	DATE	DESCRIPTION

CAMPING MAXX

SHULMAN INDUSTRIAL PARK (34.19 ACRES) LANDSCAPE PLAN

BRYAN, BRAZOS COUNTY, TEXAS

SHEET NO.
C4.1

C:\data\BCS\Proj_2016\E0559200_SHULMAN INDUSTRIAL PARK – FM 2818\cadd\Engineering\E0559200 – C4.1 Landscape Plan.dwg – September 7, 2016

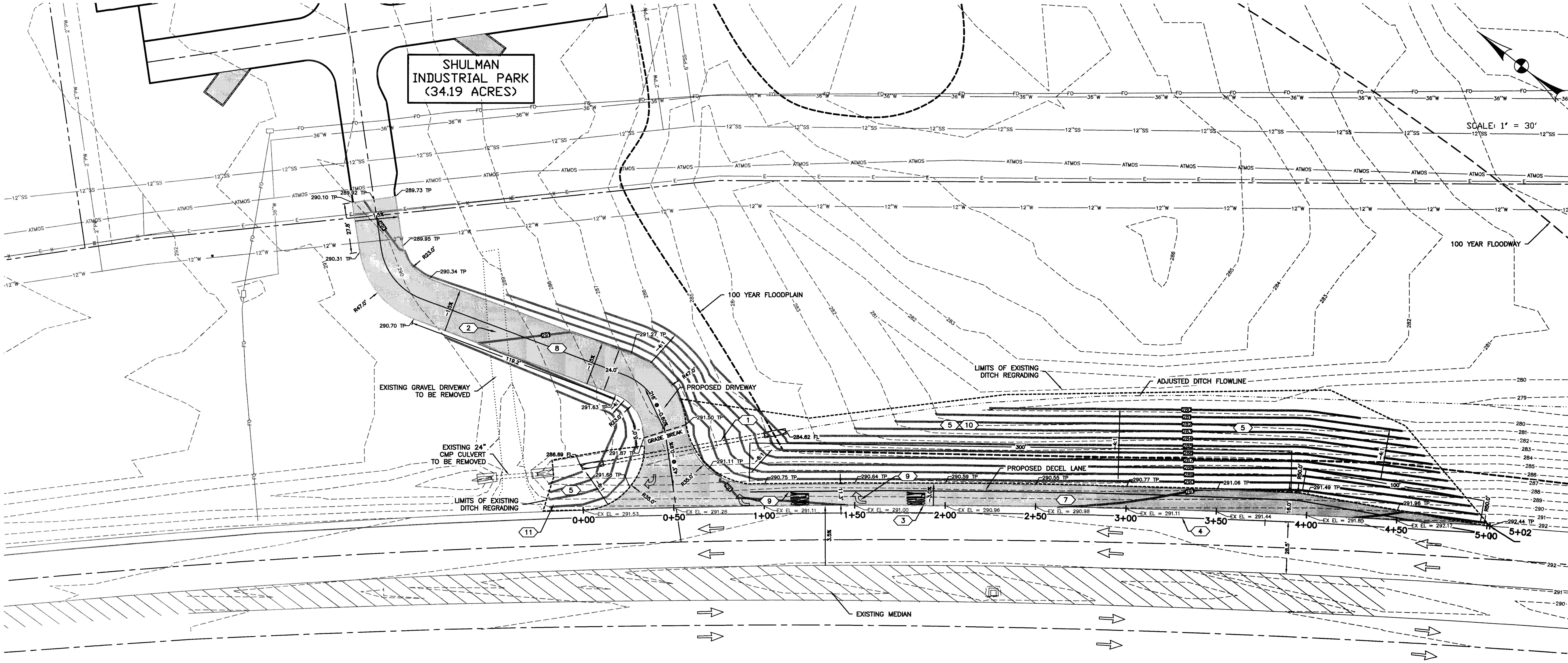

EROSION AND SEDIMENT CONTROL NOTES:

1. CONTRACTOR IS TO MAINTAIN EROSION & SEDIMENT CONTROL THROUGHOUT DURATION OF THE PROJECT AND UNTIL VEGETATION IS ESTABLISHED. ENSURE SEDIMENT IS NOT TRANSPORTED DOWNSTREAM FROM PROJECT VIA HAY BALES, SILT FENCE, OR OTHER BMP INSTALLATIONS. IF EXCESSIVE EROSION OR SEDIMENT TRANSPORT IS OBSERVED IN THE FIELD, ADDITIONAL EROSION CONTROLS SHALL BE INSTALLED BY THE CONTRACTOR.

2. INSTALL EROSION & SEDIMENT CONTROL DEVICES PER PLAN SHEET.

3. SEDIMENT MUST BE REMOVED FROM SEDIMENT CONTROL DEVICES PRIOR TO SEDIMENT REACHING 1/2 THE HEIGHT OF THE DEVICE OR STRUCTURE.

4. IF SEDIMENT ESCAPES FROM THE SITE AREA, ACCUMULATIONS MUST BE REMOVED AT A FREQUENCY TO MINIMIZE FURTHER NEGATIVE EFFECTS, AND WHENEVER FEASIBLE, PRIOR TO THE NEXT RAIN EVENT.

5. ALL DISTURBED AREAS WHERE CONSTRUCTION ACTIVITIES PERMANENTLY CEASE SHALL BE HYDROMULCH SEEDED FOR PERMANENT EROSION CONTROL NO LATER THAN 14 DAYS FROM THE LAST CONSTRUCTION ACTIVITY IN ACCORDANCE WITH TXDOT 162/164. PRIOR TO FINAL REVEGETATION, CONTRACTOR IS TO REPLACE TOPSOIL TO A DEPTH OF 6". TOPSOIL IS TO BE DISKED TO A DEPTH OF AT LEAST 4" AND LIGHTLY COMPACTED.

6. RE-VEGETATION:
HYDROMULCH.
GRASS SEED MIX TO BE AS SPECIFIED BELOW. PRIOR TO HYDROMULCH OPERATIONS, CONTRACTOR TO REPLACE AND CONSOLIDATE TOPSOIL TO A DEPTH OF 6" INCLUDING WITHIN DITCH SECTIONS. FINAL GRADES WITH ESTABLISHED VEGETATION SHALL BE AS SHOWN ON PLANS. HYDROMULCH TO BE INSTALLED PER TxDOT ITEM 164. WOOD EXCELSIOR BLANKET TO MEET TXDOT ITEM 169, CLASS 2 "FLEXIBLE CHANNEL LINER" TYPE F REQUIREMENTS.

PERMANENT URBAN SEED MIX:

FEB.1 – MAY 15: GREEN SPRANGLTOP @ 0.3 lb. PLS/ac.
BERMUDAGRASS @ 2.4 lb. PLS/ac.
SIDEOATS GRAMA @ 4.5 lb. PLS/ac.

TEMPORARY SEED MIX:

COOL SEASON: TALL FESCUE @ 4.5 lb./ac.
WESTERN WHEATGRASS @ 5.6 lb./ac.
WHEAT(RED, WINTER) @ 34 lb./ac.

WARM SEASON: FOXTAIL MILLET @ 34 lb./ac.

7. FERTILIZER:
USE A COMPLETE FERTILIZER CONTAINING NITROGEN (N), PHOSPHORIC ACID (P), AND POTASH (K) NUTRIENTS UNLESS OTHERWISE SPECIFIED ON THE PLANS. AT LEAST 50% OF THE NITROGEN COMPONENT MUST BE A SLOW-RELEASE SULFUR COATED UREA. ENSURE THAT FERTILIZER IS IN AN ACCEPTABLE CONDITION FOR DISTRIBUTION IN CONTAINERS LABELED WITH THE ANALYSIS. FERTILIZER IS SUBJECT TO TESTING BY THE TEXAS A&M FEED AND FERTILIZER CONTROL SERVICE IN ACCORDANCE WITH THE TEXAS FERTILIZER LAW.

HYDROMULCH TO BE "EXCEL FIBERMULCH II W/ TACKIFIER – APPLICATION RATE OF 2500 LBS/ACRE. GRASS SEED AND FERTILIZER INCORPORATED INTO SLURRY.

8. GUARANTEE: CONTRACTOR IS RESPONSIBLE FOR WATERING, MAINTENANCE AND ESTABLISHMENT OF GRASS FOR A PERIOD OF 90 DAYS AFTER FINAL REVEGETATION APPLICATION FOR PERMANENT EROSION CONTROL. CONTRACTOR IS TO GUARANTEE ALL PLANTED MATERIAL GROWTH AND COVERAGE FOR A PERIOD OF 6 MONTHS. GROWTH AND COVERAGE SHALL BE DEFINED AS 95% OF THE PLANTED AREA WITH UNIFORM COVERAGE OF GRASS GREATER THAN 1" IN HEIGHT WITH NO BARE SPOTS GREATER THAN 2 SQUARE FEET.

–PROVIDE A SECOND APPLICATION OF SPECIFIED SOD OR HYDROMULCH SEEDING (AS PER PLAN) TO BARE AREAS NOT MEETING SPECIFIED COVERAGE – TO BE PERFORMED WITHIN 60 DAYS OF INITIAL APPLICATION AND IMMEDIATELY UPON NOTIFICATION BY THE ENGINEER TO REPLANT.

9. CONTRACTOR SHALL NOT ALLOW SEDIMENT TO ENTER DOWNSTREAM CULVERTS, STORM SEWER OR CHANNEL AREAS. CONTRACTOR SHALL BE RESPONSIBLE FOR CLEANING OF DOWNSTREAM CULVERTS, STORM SEWER & CHANNEL AREAS AND RESTORING TO ORIGINAL CONDITION, INCLUDING ESTABLISHMENT OF REVEGETATION, SHOULD CONSTRUCTION SEDIMENT BE FOUND OUTSIDE THE LIMITS OF CONSTRUCTION.

GRADING CONSTRUCTION NOTES:

1. FILL MATERIAL USED TO ACHIEVE GRADE IN AREAS TO RECEIVE PAVEMENT OR WITHIN THE STREET RIGHT-OF-WAY SHALL BE COMPACTED TO AT LEAST 98% OF THE MAXIMUM DRY DENSITY AS DETERMINED BY THE STANDARD PROCTOR TEST, (ASTM D698), AT A MOISTURE CONTENT FROM OPTIMUM MOISTURE CONTENT TO 4% ABOVE THE OPTIMUM MOISTURE CONTENT. AREAS OUTSIDE OF THE STREET RIGHT-OF-WAY SHALL BE COMPACTED TO 95% OF THE MAXIMUM DRY DENSITY.

2. DENSITY CONTROLLED FILL – IN ALL AREAS THAT RECEIVE FILL MATERIAL IN EXCESS OF 6" SHALL MEET THE FOLLOWING REQUIREMENTS:

a. ALL PLANT MATERIAL SHALL BE CLEARED AND REMOVED FROM THE AREA.

b. EXISTING TOPSOIL SHALL BE REMOVED AND STOCKPILED FOR FINAL TOP DRESSING.

c. FILL MATERIAL SHALL BE PLACED IN 6" LIFTS AND COMPACTED TO A DENSITY OF 98% OF STD PROCTOR (ASTM D698) WITH MOISTURE CONTENT BETWEEN OPTIMUM AND 4% ABOVE OPTIMUM.

5. THE EXISTING TOPOGRAPHY SHOWN IS FROM FIELD SURVEY DATA COLLECTED BY CIVIL ENGINEERING CONSULTANTS ON 10-13-2015.

6. ALL DISTURBED AREAS WITHIN RIGHT OF WAY SHALL BE RESEEDED IN ACCORDANCE WITH CURRENT TXDOT SPECIFICATION ITEMS 164/166 IMMEDIATELY FOLLOWING CONSTRUCTION.

7. CONTRACTOR RESPONSIBLE FOR IMPLEMENTING AND ADHERING TO TXDOT TRAFFIC CONTROL REQUIREMENTS. SEE TXDOT TRAFFIC CONTROL PLAN CONVENTIONAL ROAD SHOULDER WORK TCP(2-4)-12.

GENERAL NOTES:

1. ALL UTILITIES AND SERVICE LINES SHOWN ARE TAKEN FROM BEST AVAILABLE RECORD INFORMATION BASED ON CONSTRUCTION UTILITY MAP DOCUMENTS OBTAINED BY CIVIL ENGINEERING CONSULTANTS (CEC) FROM CITY & INDEPENDENT AGENCIES AND/OR ABOVE GROUND FIELD EVIDENCE. SHOWN POSITIONS MAY NOT REPRESENT AS-BUILT POSITIONS.

CONTRACTOR IS RESPONSIBLE TO REPORT ANY CONFLICTS BETWEEN PLAN AND ACTUAL CONDITIONS PRIOR TO CONSTRUCTION OF WORK ELEMENT AFFECTED. OWNER AND ENGINEER SHALL NOT BE RESPONSIBLE FOR THE ACCURACY OR COMPLETENESS OF INFORMATION OR DATA RELIED ON TO DEPICT UNDERGROUND FACILITIES. CONTRACTOR IS TO CONTACT OWNERS OF ALL UTILITIES AND SERVICE LINES WITHIN THE PROJECT AREA AND NOTIFY OF INTENT AT LEAST 1 WEEK PRIOR TO CONSTRUCTION. CONTRACTOR IS RESPONSIBLE FOR COORDINATING WITH FACILITY OWNERS. CONTRACTOR IS TO VERIFY THE EXACT LOCATION AND VERTICAL POSITIONING OF ALL PIPELINES, EXISTING UTILITIES, AND SERVICE LINES WITHIN THE PROJECT AREA WHETHER SHOWN ON THE PLANS OR NOT, AT LEAST 48 HOURS PRIOR TO CONSTRUCTION. CONTRACTOR IS RESPONSIBLE FOR COORDINATING WITH FACILITY OWNERS AND ANY RELOCATION, REMOVAL, AND INSTALLATION, OR ADJUSTMENTS TO ALL EXISTING FACILITIES REQUIRED FOR PROSECUTION OF THE WORK. CONTRACTOR IS TO MAINTAIN STRUCTURAL INTEGRITY OF ALL PIPELINES, ELECTRIC TRANSMISSION POLES AND LINES, PERMANENT AND TEMPORARY UTILITIES. CONTRACTOR IS RESPONSIBLE FOR ANY DAMAGE DONE TO EXISTING UTILITY FACILITIES, PAVEMENT, ETC. AS A RESULT OF CONSTRUCTION ACTIVITIES.

CONTRACTOR TO CONTACT TEXAS811 & CITY OF BRYAN WATER SERVICES 96 HOURS PRIOR TO CONSTRUCTION. SPECIFIC ATTENTION SHOULD BE PAID TO FRANCHISE UTILITIES AS WELL AS OIL AND GAS PIPELINE COMPANIES. SHOULD A CONFLICT ARISE BETWEEN THE PROPOSED CONSTRUCTION AND AN EXISTING UTILITY, CONTACT CEC 48 HOURS PRIOR TO CONSTRUCTION.

2. CONTRACTOR IS TO MAINTAIN AND ENSURE INTEGRITY OF ALL EXISTING UTILITIES. CLOSE ATTENTION IS TO BE PAID TO ANY EXISTING POWER, TELEPHONE, & FIBER OPTIC LINES & POLES.

3. UNLESS OTHERWISE DIRECTED BY THE OWNER, ALL MATERIALS AND DEBRIS DEMOLISHED OR REMOVED SHALL BECOME THE PROPERTY OF THE CONTRACTOR AND SHALL BE REMOVED FROM THE SITE AND DISPOSED OF IN A MANNER SATISFACTORY TO THE OWNER & ENGINEER.

4. CONTRACTOR SHALL PREVENT TRANSPORT OF SEDIMENT TO ADJACENT PROPERTIES AND PUBLIC RIGHT OF WAYS AND IS RESPONSIBLE FOR CLEANUP IF SUCH OCCURS. CONTRACTOR IS TO INSURE NO CONSTRUCTION DEBRIS OR MUD IS TRACKED OR DISCARDED ON TO ANY PUBLIC OR PRIVATE STREETS OR LAND AND IS RESPONSIBLE FOR SITE CLEANUP AFTER EACH DAYS WORK. CONTRACTOR IS TO MAKE USE OF BEST MANAGEMENT PRACTICES TO PREVENT SEDIMENT FROM LEAVING THE SITE OR ENTERING EXISTING STORM SEWER OR CREEK AREAS. CONTRACTOR SHALL MAINTAIN EROSION CONTROL THROUGHOUT CONSTRUCTION PERIOD AND UNTIL GRASS IS ESTABLISHED.

5. LIMITS OF WORK: CONTRACTOR IS TO CONFINE ALL WORK TO OWNER'S PROPERTY AND PUBLIC RIGHT OF WAY. NO CONSTRUCTION ACTIVITY IS ALLOWED ON OR THROUGH PRIVATE PROPERTY UNLESS COVERED BY A PUBLIC UTILITY EASEMENT OR OTHER DOCUMENTED AGREEMENT.

6. CONTRACTOR SHALL BE RESPONSIBLE FOR THE CONTAINMENT AND PROPER DISPOSAL OF ALL LIQUID AND SOLID WASTE ASSOCIATED WITH THIS PROJECT. THE CONTRACTOR SHALL USE ALL MEANS NECESSARY TO PREVENT THE OCCURRENCE OF WIND BLOWN LITTER FROM THE PROJECT SITE.

CONSTRUCTION TESTING RECOMMENDATIONS:

1. THE OWNER SHALL OBTAIN AN INDEPENDENT TESTING LABORATORY TO CONDUCT ALL MATERIALS/COMPACTION TESTING. CONTRACTOR IS RESPONSIBLE TO NOTIFY AND COORDINATE WITH LABORATORY IN ADVANCE OF WHEN OPERATIONS WILL BE PERFORMED. INITIAL TESTING SHALL BE PAID FOR BY THE OWNER, FAILED TESTS AND RE-TESTS SHALL BE PAID FOR BY THE CONTRACTOR. WORK WILL NOT BE ACCEPTABLE FOR PAYMENT WITHOUT PASSED TEST RESULTS. COPIES OF RESULTS TO BE DELIVERED TO OWNER AND CIVIL ENGINEERING CONSULTANTS.

2. SUB-GRADE MATERIAL / GENERAL FILL: OPTIMUM MOISTURE/DENSITY RELATIONSHIP TO BE DETERMINED AT RATE OF ONE SAMPLE PER MATERIAL ENCOUNTERED. IN-PLACE DENSITY & MOISTURE CONTENT TESTS TO BE TAKEN AT A RATE OF 1 (MINIMUM) FOR EVERY 250 SY FOR EACH 6" OF COMPACTED THICKNESS.

3. SUBGRADE STABILIZATION: A LIME OR CEMENT SERIES SHALL BE RUN TO DETERMINE THE EXACT AMOUNT OF LIME OR CEMENT TO BE ADDED TO THE SUBGRADE PRIOR TO COMMENCEMENT OF STABILIZATION. IN-PLACE DENSITY & MOISTURE CONTENT TESTS TO BE TAKEN AT A RATE OF 1(MINIMUM) FOR EVERY 250 SY FOR EACH 6" OF COMPACTED THICKNESS.

4. CONCRETE: TEST CYLINDERS TO BE TAKEN AT A RATE OF 1 SET OF 3 PER 100 CY OF CONCRETE PLACED OR A MINIMUM OF 1 SET OF 3 PER STRUCTURE AT TIME OF POUR.

ALL ITEMS NOT INDICATED AS "EXISTING" ARE PROPOSED SITE ELEMENTS TO BE CONSTRUCTED, FURNISHED INSTALLED, BY THE CONTRACTOR. ALL ITEMS NECESSARY FOR PROPER COMPLETION OF THE WORK NOT SPECIFICALLY CALLED FOR OR SPECIFIED ON THE PLANS ARE THE RESPONSIBILITY OF THE CONTRACTOR AND CONSIDERED SUBSIDIARY TO THE WORK.

TRAFFIC CONTROL NOTES:

1. CONTRACTOR TO EMPLOY TXDOT TRAFFIC CONTROL PLAN TCP (2-4a) WHEN DAILY LANE CLOSURES ARE REQUIRED. LANE CLOSURES TO BE LIMITED BETWEEN THE HOURS OF 8:30 AM TO 4:30 PM DAILY.

2. CONTRACTOR SHALL BE REQUIRED TO SHOULDER UP PAVEMENT DROP OFF WITH A 1:3 SLOPE AT THE END OF EACH DAY. CHANNELIZERS AND SHOULDER DROP OFF SIGNS ARE REQUIRED IN ACCORDANCE WITH TXDOT STANDARD WORKSHEET FOR EDGE CONDITION TREATMENT TYPES.

LEGEND

Symbol	Description
—[290]—	PROPOSED CONTOUR
- - -290- - -	EXISTING CONTOUR
———	EXISTING EGDE OF PAVEMENT
—SS—	EXISTING SANITARY SEWER
⊛	EXISTING SANITARY SEWER MANHOLE
—E—	EXISTING OVERHEAD ELECTRIC LINE
—W—	EXISTING WATER LINE
—ATMOS—	EXISTING PIPELINE
—FO—	EXISTING FIBER OPTIC
—— - - ——	PROPERTY LINE
— — — —	GRADE BREAK
———	PROPOSED BACK OF CURB
100' @ 1.0% →	SLOPE ARROWS
——→	DIRECTION OF FLOW

EX. EL = EXISTING ELEVATION

TP = TOP OF PAVEMENT

FL = FLOW LINE

KEY NOTES

1	INSTALL APPROXIMATELY 90 LF OF RCP CULVERT @ 2.3% WITH 6:1 SAFETY END TREATMENTS. SEE SHEET C5.2 FOR TXDOT S.E.T. DETAIL.
2	DEMO AND REMOVE FULL DEPTH OF EXISTING GRAVEL DRIVEWAY AS NECESSARY TO ACHIEVE PROPOSED DRIVEWAY PAVEMENT ELEVATIONS. REPLACE WITH DENSITY CONTROLLED FILL.
3	SAWCUT, DEMOLISH, AND REMOVE APPROXIMATELY 505 LF OF EXISTING ASPHALT PAVEMENT TO ENSURE A CLEAN CONNECTION WITH THE NEW CONCRETE PAVEMENT.
4	EXISTING PAVEMENT STRIPING TO BE MODIFIED PER THE STRIPING PLAN SHOWN ON THIS SHEET.
5	RE-GRADE EXISTING DITCH AS NOTED TO LIMITS OF PROPOSED GRADING.
6	NOT USED
7	INSTALL 6" THICK REINFORCED CONCRETE PAVING. REINFORCE WITH #4 BARS @ 18" O.C. SEE SHEET C5.2 FOR CROSS SECTION DETAIL. THIS QUANTITY COMPRISES THE DECELERATION LANE, WHICH IS DELINEATED AT THE GRADE BREAK WITH THE DRIVEWAY.
8	INSTALL APPROXIMATELY 580 SY OF 6" THICK REINFORCED CONCRETE PAVING. SEE SHEET C6.2 FOR CROSS SECTION DETAIL. REINFORCE WITH #4 BARS @ 18" O.C. THIS QUANTITY COMPRISES THE DRIVEWAY, WHICH IS DELINEATED AT THE GRADE BREAK WITH THE DECEL LANE.
9	INSTALL PAVEMENT MARKING AND STRIPING PER STRIPING PLAN SHOWN ON THIS SHEET.
10	INSTALL APPROXIMATELY 20,000 SF OF NEW HYDROMULCH. SEE NOTE 6 OF THE EROSION AND SEDIMENT CONTROL NOTES.
11	INSTALL APPROXIMATELY 1400 SF OF NEW HYDROMULCH. SEE NOTE 6 OF THE EROSION AND SEDIMENT CONTROL NOTES.

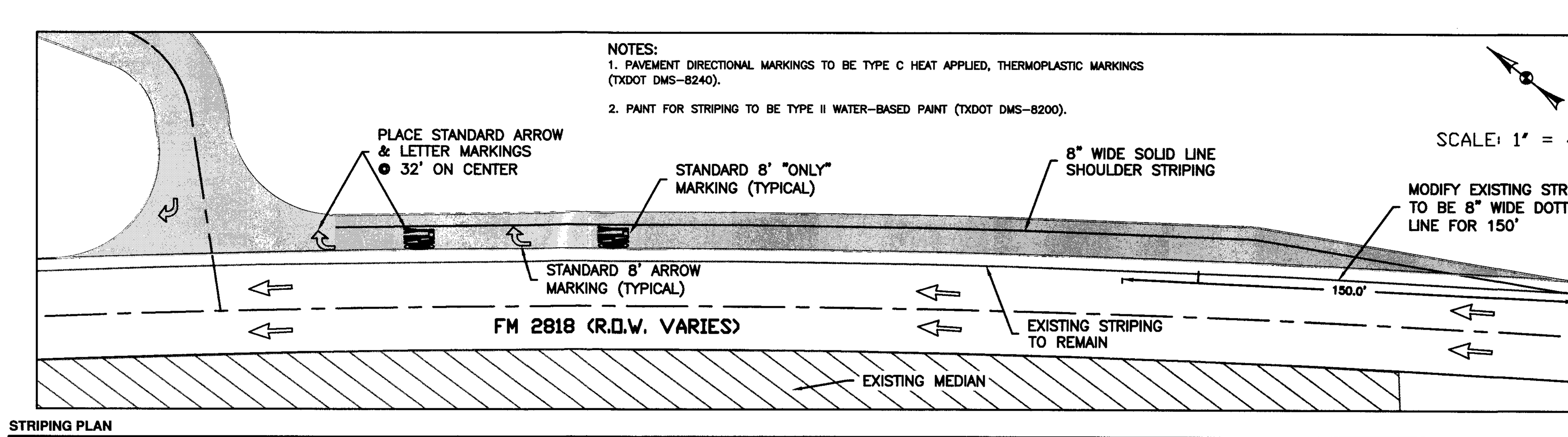

STRIPING PLAN

DESIGNED BY: SJH
DRAWN BY: SJH
APPROVED: AAP
JOB NO: E0559200

D O N D U R D E N , I N C
d.b.a. CIVIL ENGINEERING CONSULTANTS
4101 S. TEXAS AVE, SUITE A
BRYAN, TEXAS 77802
TEL: (979) 846-6212
FAX: (979) 846-8252
REGISTRATION #F-2214
CEC
SAN ANTONIO / LAREDO
BRYAN / COLLEGE STATION

THIS DOCUMENT IS RELEASED UNDER THE AUTHORITY OF ALFRED A. PAINE, P.E. 97221 ON 9/7/2016 FOR THE PURPOSE OF INTERIM REVIEW. –NOT FOR CONSTRUCTION–

REV	DATE	DESCRIPTION

CAMPING MAXX
SHULMAN INDUSTRIAL PARK (34.19 ACRES)
PHASE ONE
DECELERATION LANE AND DRIVEWAY PLAN
BRYAN, BRAZOS COUNTY, TEXAS

SHEET NO.
C5.1

<:\data\BCS\Proj_2016\E0559200_SHULMAN INDUSTRIAL PARK – FM 2818\cadd\Engineering\E0559200 – C5.1-5.2 Deceleration and Driveway Plan.dwg – September 7, 2016

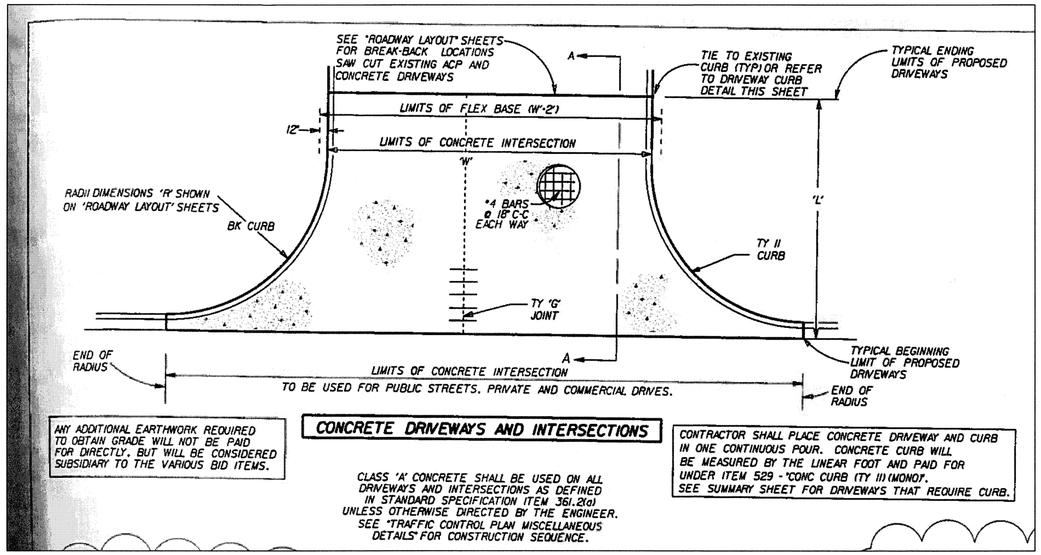

ANY ADDITIONAL EARTHWORK REQUIRED TO OBTAIN GRADE WILL NOT BE PAID FOR DIRECTLY, BUT WILL BE CONSIDERED SUBSIDIARY TO THE VARIOUS BID ITEMS.

CONCRETE DRIVEWAYS AND INTERSECTIONS

CLASS 'A' CONCRETE SHALL BE USED ON ALL DRIVEWAYS AND INTERSECTIONS AS DEFINED IN STANDARD SPECIFICATION ITEM 361.2(a) UNLESS OTHERWISE DIRECTED BY THE ENGINEER. SEE "TRAFFIC CONTROL PLAN MISCELLANEOUS DETAILS" FOR CONSTRUCTION SEQUENCE.

CONTRACTOR SHALL PLACE CONCRETE DRIVEWAY AND CURB IN ONE CONTINUOUS POUR. CONCRETE CURB WILL BE MEASURED BY THE LINEAR FOOT AND PAID FOR UNDER ITEM 529 - "CONC CURB (TY II) (MONO)". SEE SUMMARY SHEET FOR DRIVEWAYS THAT REQUIRE CURB.

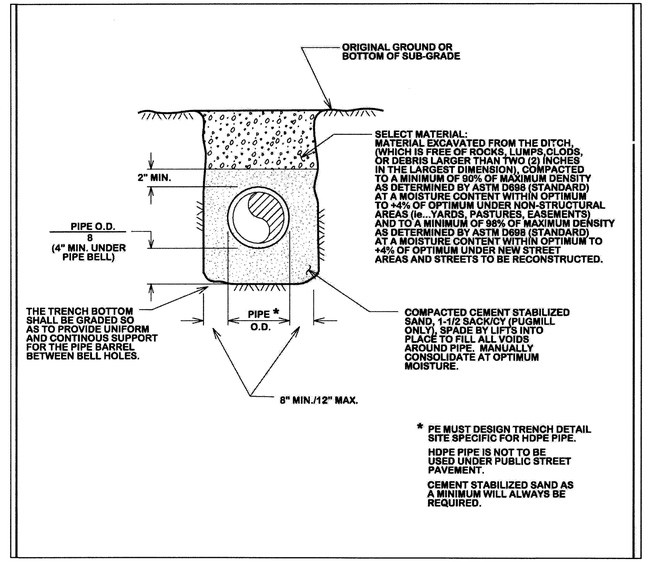

* PE MUST DESIGN TRENCH DETAIL SITE SPECIFIC FOR HDPE PIPE.

HDPE PIPE IS NOT TO BE USED UNDER PUBLIC STREET PAVEMENT.

CEMENT STABILIZED SAND AS A MINIMUM WILL ALWAYS BE REQUIRED.

CONCRETE PAVEMENT JUNCTION AT EXISTING HMAC PAVEMENT

NOT TO SCALE

NOTES:
1. CONCRETE TO BE 4000 PSI – 28 DAY STRENGTH PORTLAND CEMENT CONCRETE.
2. TEST CYLINDERS TO BE TAKEN 1 PER 100 CY OF CONCRETE PLACED or 3 PER POUR (MIN).
3. ALL TRAFFIC IS TO BE EXCLUDED FROM PAVEMENT BY MEANS OF BARRICADES AND SIGNS UNTIL CONCRETE IS AT LEAST 14 DAYS OLD. CONSTRUCTION EQUIPMENT & TRUCK TRAFFIC TO BE EXCLUDED FROM PAVEMENT UNTIL SPECIFIED STRENGTH IS REACHED.
4. SUBGRADE AND STABILIZED SUBGRADE TO BE COMPACTED TO MIN. 95% STANDARD PROC. (ASTM D 698) AND EXTEND 2' BEYOND BACK OF CURB/EDGE OF PAVEMENT.

REINFORCED CONCRETE PAVEMENT

CONCRETE PAVEMENT (6" THICKNESS) NOT TO SCALE

CROSS PIPE LENGTHS, REQUIRED PIPE SIZES, & RIPRAP QUANTITIES ④							
Nominal I.D.	120% Riprap Culvert Span	Pipe Culvert Span	Single Barrel Q ≤	Multi-Barrel Q ≤	Q2	Conditions For Use of Cross Pipes	Cross Pipe Size
12"	0.6	9"	N/A	2'- 1"	1'- 9"		
15"	0.7	11"	N/A	2'- 5"	2'- 2"		3" Sch. 40 (3.500" O.D.)
18"	0.8	1'- 2"	N/A	2'-10"	2'- 8"	3 or more Pipe Culverts	
21"	0.9	1'- 4"	N/A	3'- 2"	3'- 1"		
24"	0.9	1'- 7"	N/A	3'- 6"	3'- 7"		
27"	1.0	1'- 8"	N/A	3'-10"	3'-11"	3 or more Pipe Culverts	
30"	1.1	1'-10"	N/A	4'- 2"	4'- 4"	2 or more Pipe Culverts	3 1/2" Sch. 40 (4.000" O.D.)
33"	1.2	1'-11"	4'- 2"	4'- 5"	4'- 8"	All Pipe Culverts	
36"	1.3	2'- 1"	4'- 5"	4'- 9"	5'- 1"		
42"	1.5	2'- 4"	4'-11"	5'- 3"	5'-10"	All Pipe Culverts	4" Sch. 40 (4.500" O.D.)
48"	1.7	2'- 7"	5'- 5"	5'- 9"	6'- 7"		
54"	2.0	3'- 0"	5'-11"	6'- 4"	7'- 6"		
60"	2.2	3'- 3"	6'- 5"	7'- 4"	8'- 3"		5" Sch. 40 (5.563" O.D.)
66"	2.4	3'- 5"	6'-11"	7'-10"	8'- 9"	All Pipe Culverts	
72"	2.7	3'- 8"	7'- 5"	8'- 5"	9'- 4"		

① The proper installation of the first Cross Pipe is critical for vehicle safety. The top of the first Cross Pipe must be placed at no more than 6" above the Flow Line.

② For all Cross Pipes with Flow Lines 24" and greater, shall be as shown in the PIPE SIZE table, or the First Cross Pipe shall be 3 1/2" Standard Pipe (4" O.D.).

③ The Initial Cross Pipe from the bottom of the Culvert shall always be installed using a bolted connection. Care shall be taken to align the Cross Pipe Anchor Bolts with the holes in the Cross Pipe so as to permit placement of the bolted connection to allow maximum access. At the Contractor's option, the remaining Cross Pipes may also be installed using the bolted connection details.

④ Watch Cross Slope as shown elsewhere in the plans. Cross Slope of 8% or Flatter is required for vehicle safety.

⑤ Riprap placed beyond the limits shown will be paid as Concrete Riprap in accordance with Item 432, "Riprap".

⑥ Quantities shown are for one end of one reinforced Concrete Pipe Culvert. For Multiple Culverts, or for Box or Arch Culverts, Metal Pipe Culverts, quantities will need to be adjusted. Riprap quantities are for Contractor's information only.

GENERAL NOTES:

Cross Pipes are designed for a traversing load of 10,000 pounds of yield or recommended by Research Report 280-2F, "Structural Behavior of Corrugated Metal Bridge Structures", Texas Transportation Institute, Marsh 1981.

Safety End Treatments shown herein are intended for use in connection with Cross Pipes that are placed on a skew in order to traverse the openings approximately perpendicular to the Cross Pipes.

Unless otherwise noted all necessary inverts shall be Concrete Riprap conforming to the requirements of Item 432, "Riprap".

Synthetic Fibers listed on the "Fibers for Concrete" Material Producer List may be used in lieu of welded wire reinforcing in Concrete Culverts unless noted otherwise. Payment for Fibers and Hookbolt is included in the Price Bid for the Concrete Culvert.

Cross Pipes shall meet the requirements of ASTM A53 (Type E or S), Grade B1, ASTM A500 (Grade B), or API 5L X52. Bolts and Nuts shall conform to ASTM A307.

All steel components, except concrete reinforcing, shall be galvanized. Damaged galvanized coating resulting from transport or construction shall be repaired in accordance with the specifications.

Texas Department of Transportation — Bridge Division Standard

SAFETY END TREATMENT
FOR 12" DIA TO 72" DIA PIPE CULVERTS
TYPE II – PARALLEL DRAINAGE

SETP-PD

FILE: setp-pd.dgn	DN: CAP	CK: JW	DW: CAP	CK: JW	CAP
©TxDOT February 2012	CONT: 0912	SECT:	JOB:		HIGHWAY:
REVISIONS: 08/12: Added Safety End Treatment Table	DIST:	COUNTY:			SHEET NO:

THIS DOCUMENT IS RELEASED UNDER THE AUTHORITY OF ALFRED A. PAINE, P.E. 97221 ON 9/7/2016 FOR THE PURPOSE OF INTERIM REVIEW. –NOT FOR CONSTRUCTION–

DESIGNED BY:	DRAWN BY:	APPROVED:	JOB NO:
SJH	SJH	AAP	E05559200

D. O. N. D U R D E N , I N C.
d.b.a CIVIL ENGINEERING CONSULTANTS
4101 S. TEXAS AVE, SUITE A
BRYAN, TEXAS 77802
TEL: (979) 846-6212
FAX: (979) 846-8252
REGISTRATION #F-2214
SAN ANTONIO / LAREDO
BRYAN / COLLEGE STATION

REV	DATE	DESCRIPTION

CAMPING MAXX

SHULMAN INDUSTRIAL PARK (34.19 ACRES) PHASE ONE

DECELERATION LANE AND DRIVEWAY DETAILS

BRYAN, BRAZOS COUNTY, TEXAS

SHEET NO.

C5.2

C:\data\BCS\Proj_2016\E05559200_SHULMAN INDUSTRIAL PARK – FM 2818\cadd\Engineering\E05559200 – C5.1-5.2 Deceleration and Driveway Plan.dwg – September 7, 2016

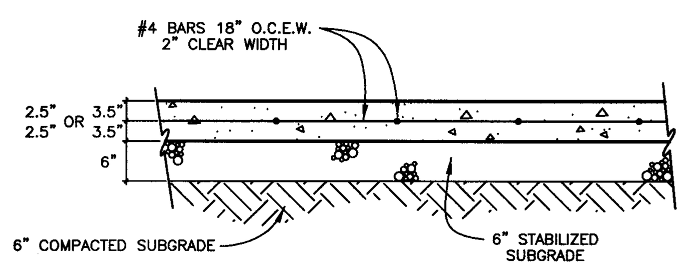

NOTES:

1. CONCRETE TO BE 4000 PSI – 28 DAY STRENGTH PORTLAND CEMENT CONCRETE
2. TEST CYLINDERS TO BE TAKEN 1 SET PER 100 CY OF CONCRETE PLACED or 3 PER POUR (MIN).
3. ALL TRAFFIC IS TO BE EXCLUDED FROM PAVEMENT BY MEANS OF BARRICADES AND SIGNS UNTIL CONCRETE IS AT LEAST 14 DAYS OLD.
4. SUBGRADE AND STABILIZED SUBGRADE TO BE COMPACTED TO MIN. 98% STANDARD PROC. (ASTM D 698)

REINFORCED CONCRETE PAVEMENT

5" – 7" THICKNESS

NOT TO SCALE

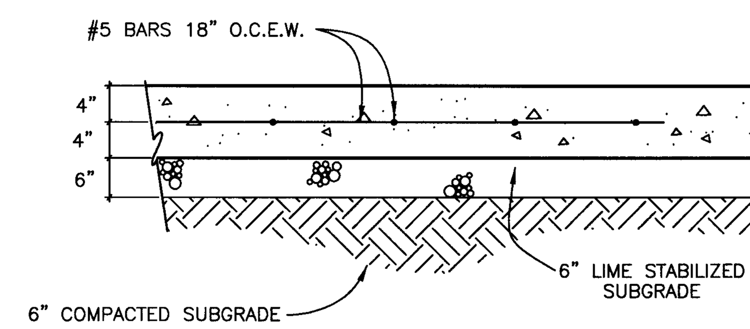

NOTES:

1. CONCRETE TO BE 4000 PSI – 28 DAY STRENGTH PORTLAND CEMENT CONCRETE
2. ALL TRAFFIC IS TO BE EXCLUDED FROM PAVEMENT BY MEANS OF BARRICADES AND SIGNS UNTIL CONCRETE IS AT LEAST 14 DAYS OLD.
3. SUBGRADE AND LIME STAB. BASE TO BE COMPACTED TO MIN. 98% STANDARD PROC. (ASTM D 698)

REINFORCED CONCRETE DUMPSTER PAD & APRON

8" THICKNESS

NOT TO SCALE

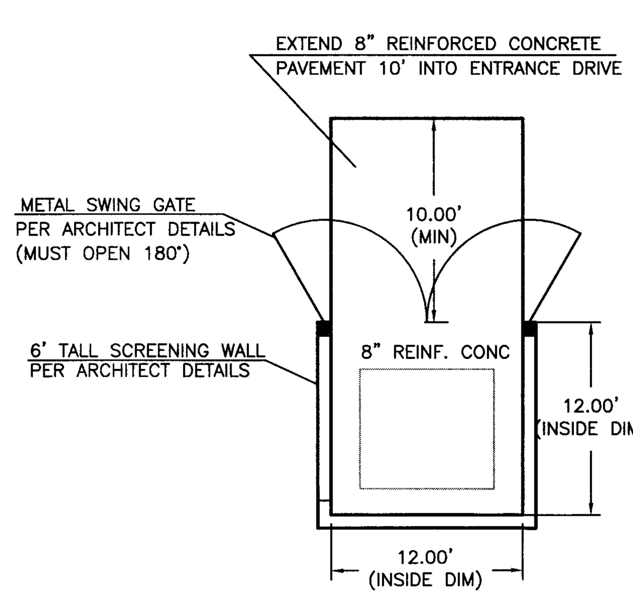

NOTES:

1. FOR INSTALLATIONS WHERE SITE GRADING EXTERIOR TO THE SCREENING WALL IS ABOVE DUMPSTER PAD ELEVATIONS, UTILIZE CONCRETE RETAINING WALL AND PLACE SCREENING WALL ON TOP TO ACHIEVE 6' TOTAL HEIGHT.
2. 8" REINF. CONC. PAD TO EXTEND UNDER SCREENING WALL.

DUMPSTER ENCLOSURE

NOT TO SCALE

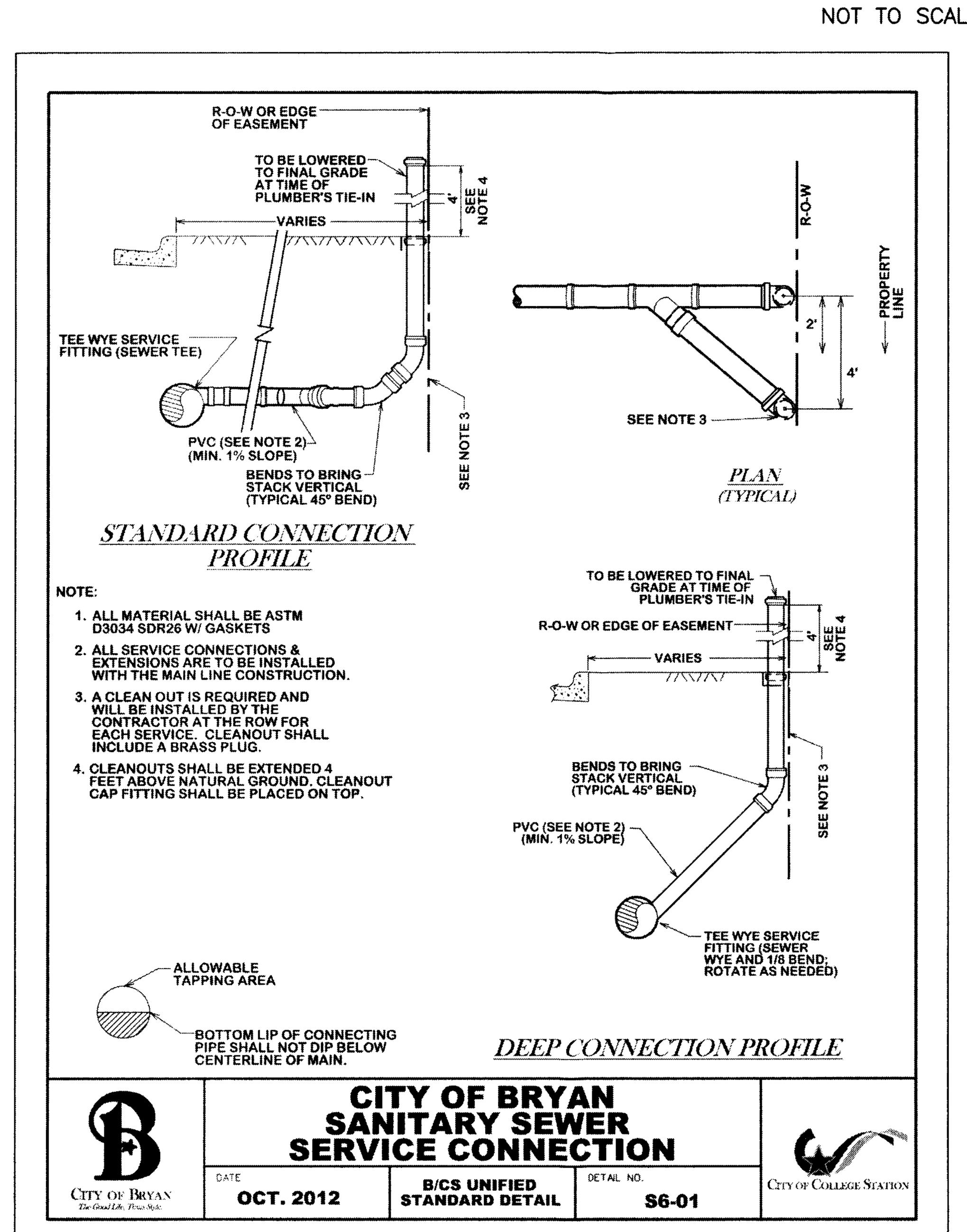

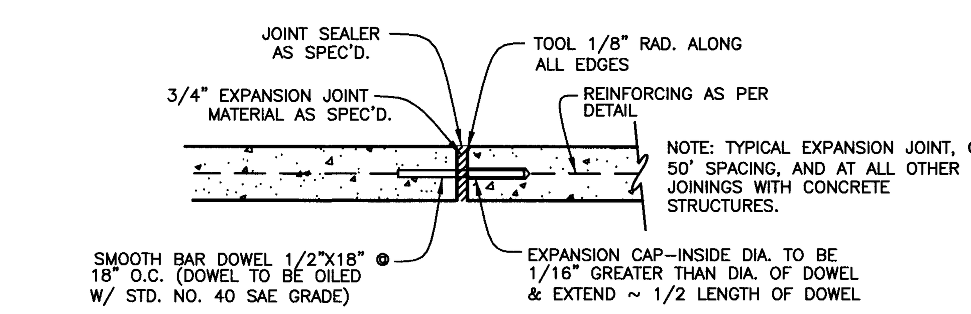

MATERIALS:

EJT. FILLER TO BE "SEALTIGHT–FIBRE EXPANSION JOINT FILLER"
EJT. SEALANT TO BE "SEALTIGHT–#164, HI–SPEC OR SOF–SEAL" HOT APPLIED SEALANT – BOTH AS MFD. BY W.R. MEADOWS, INC.

EXPANSION JOINT (EJT)

NOT TO SCALE

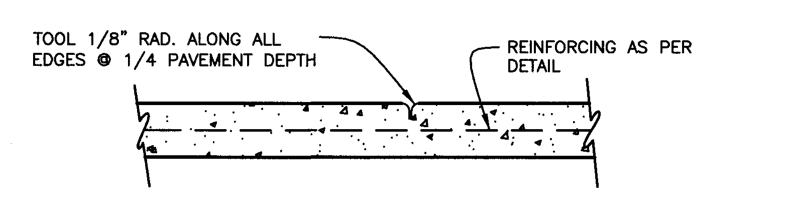

NOTE:
TYPICAL CONTRACTION JOINT SPACING:
SIDEWALKS – 5'
PARKING AREAS – 10'x10' SPACING.
MAIN DRIVE AISLES – 14'

CONTRACTION JOINT

NOT TO SCALE

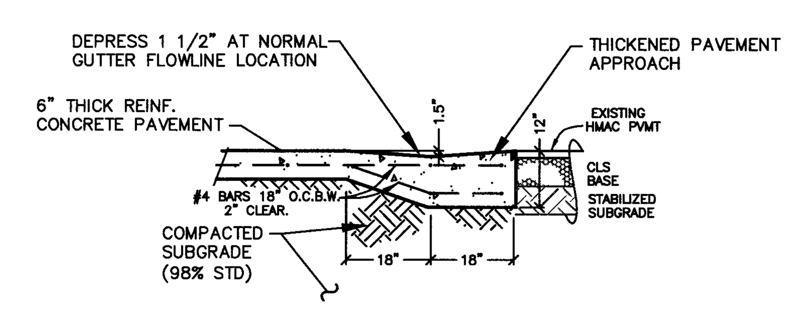

CONCRETE PAVEMENT JUNCTION AT EXISTING HMAC PAVEMENT

NOT TO SCALE

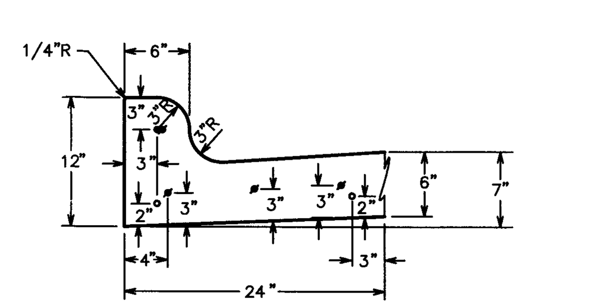

∘ =#4 BARS
⌀ =3/4" X 18" SMOOTH EXPANSION DOWELS

NOTE:
1. EXPANSION JOINTS IN CURB & GUTTER SHALL BE SPACED AT A MAXIMUM DISTANCE OF 50' APART AND AT ALL RADIUS POINTS, P.T.'S AND P.C.'S.
2. SLOPE GUTTER PER GRADING PLAN TO ENSURE POSITIVE DRAINAGE

MONOLITHIC CONCRETE CURB & GUTTER SECTION

NOT TO SCALE

NOTE:
1. ALL PAVEMENT SURFACES SHALL BE BROOM FINISHED PERPENDICULAR TO PEDESTRIAN TRAFFIC FLOW.

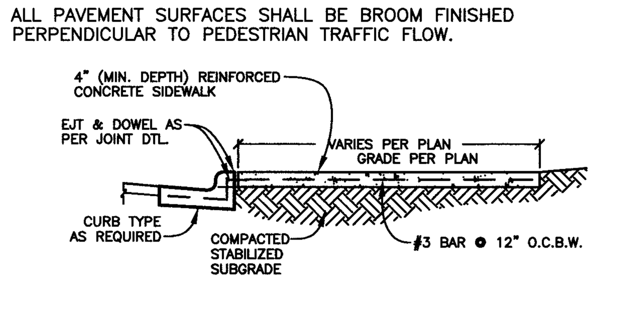

STD. CONCRETE SIDEWALK

NOT TO SCALE

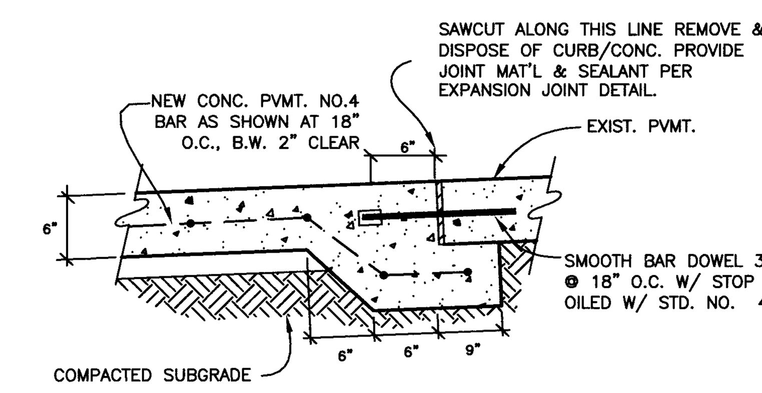

PAVEMENT JUNCTION / PAVMENT REPAIR

NOT TO SCALE

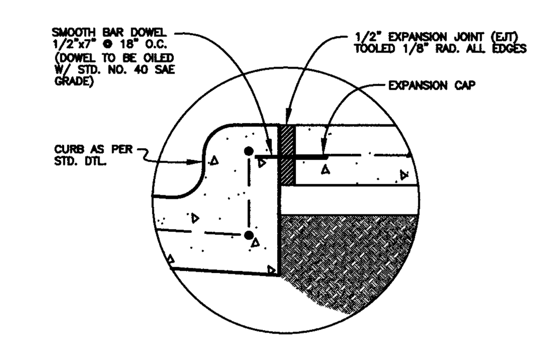

JOINT DETAIL

NOT TO SCALE

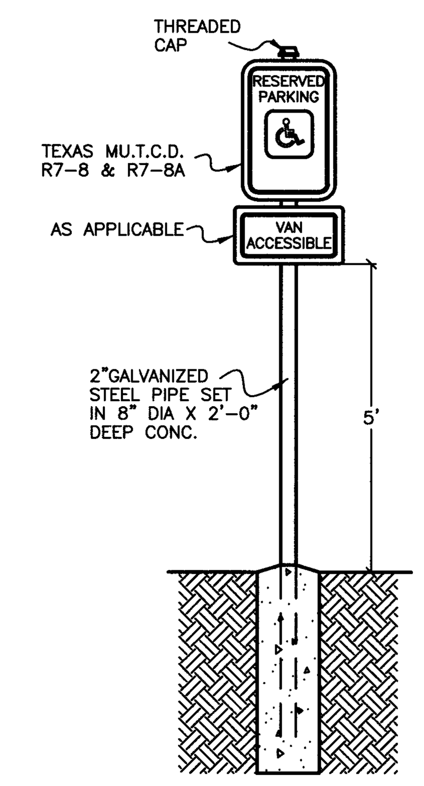

HANDICAP PARKING SIGN

NOT TO SCALE

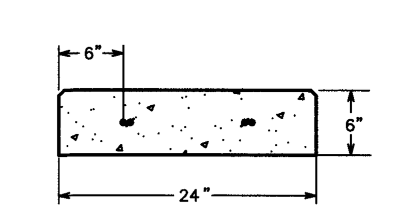

∘ =#4 BARS
⌀ =3/4" X 18" SMOOTH EXPANSION DOWELS

NOTE:
1. EXPANSION JOINTS IN CURB SHALL BE SPACED AT A MAXIMUM DISTANCE OF 50' APART AND AT ALL RADIUS POINTS, P.T.'S AND P.C.'S.

CONCRETE FLUSH CURB SECTION

NOT TO SCALE

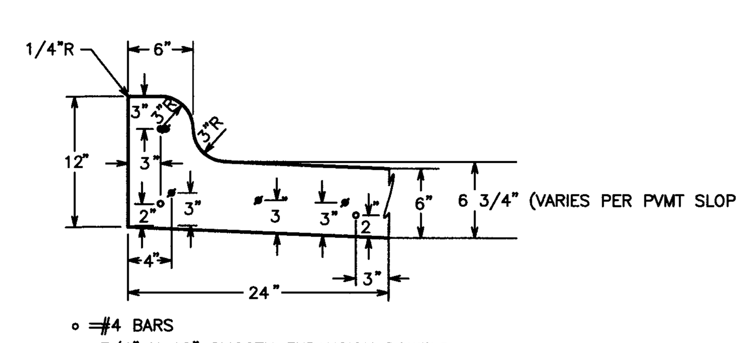

∘ =#4 BARS
⌀ =3/4" X 18" SMOOTH EXPANSION DOWELS

NOTE:
1. EXPANSION JOINTS IN CURB & GUTTER SHALL BE SPACED AT A MAXIMUM DISTANCE OF 50' APART AND AT ALL RADIUS POINTS, P.T.'S AND P.C.'S.
2. SLOPE GUTTER PER GRADING PLAN TO ENSURE POSITIVE DRAINAGE

MONOLITHIC CONCRETE SPILL CURB SECTION

NOT TO SCALE

GENERAL NOTES:

1. ALL EXISTING UTILITIES AND SERVICE LINES SHOWN ARE TAKEN FROM BEST AVAILABLE RECORD INFORMATION BASED ON CONSTRUCTION UTILITY MAP DOCUMENTS OBTAINED BY CIVIL ENGINEERING CONSULTANTS (CEC) AND SURVEYING FROM CITY & INDEPENDENT AGENCIES AND/OR ABOVE GROUND FIELD EVIDENCE. SHOWN POSITIONS MAY NOT REPRESENT AS–BUILT POSITIONS. CONTRACTOR IS RESPONSIBLE TO VERIFY EXACT UTILITY LOCATIONS (PUBLIC AND PRIVATE).

2. CONTRACTOR IS RESPONSIBLE TO REPORT ANY CONFLICTS BETWEEN PLAN AND ACTUAL CONDITIONS PRIOR TO CONSTRUCTION OF WORK ELEMENT AFFECTED. OWNER AND ENGINEER SHALL NOT BE RESPONSIBLE FOR THE ACCURACY OR COMPLETENESS OF INFORMATION OR DATA RELIED ON TO DEPICT UNDERGROUND FACILITIES. CONTRACTOR IS TO CONTACT OWNERS OF ALL UTILITIES AND SERVICE LINES WITHIN THE PROJECT AREA AND NOTIFY OF INTENT AT LEAST 1 WEEK PRIOR TO CONSTRUCTION. CONTRACTOR IS RESPONSIBLE FOR COORDINATING WITH FACILITY OWNERS. CONTRACTOR IS TO VERIFY THE EXACT LOCATION AND VERTICAL POSITIONING OF ALL PIPELINES, EXISTING UTILITIES, AND SERVICE LINES WITHIN THE PROJECT AREA WHETHER SHOWN ON THE PLANS OR NOT, AT LEAST 48 HOURS PRIOR TO CONSTRUCTION.

3. CONTRACTOR TO CONTACT TEXAS811 AT LEAST ONE WEEK PRIOR TO CONSTRUCTION FOR LOCATION SERVICES. SPECIFIC ATTENTION SHOULD BE PAID TO FRANCHISE UTILITIES AS WELL AS OIL AND GAS PIPELINE COMPANIES. SHOULD A CONFLICT ARISE BETWEEN THE PROPOSED CONSTRUCTION AND AN EXISTING UTILITY, CONTACT CIVIL ENGINEERING CONSULTANTS 48 HOURS PRIOR TO CONSTRUCTION & AWAIT INSTRUCTION.

4. CONTRACTOR IS TO MAINTAIN AND ENSURE INTEGRITY OF ALL EXISTING UTILITIES, PAVEMENT & SIDEWALK. CLOSE ATTENTION IS TO BE PAID TO ANY EXISTING POWER, TELEPHONE, & FIBER OPTIC LINES & POWER OR LIGHT POLES. CONTRACTOR IS RESPONSIBLE FOR ANY DAMAGE DONE TO EXISTING PUBLIC OR PRIVATE UTILITY FACILITIES, PAVEMENT, ETC. AS A RESULT OF CONSTRUCTION ACTIVITIES AND IS TO RESTORE TO ORIGINAL OR BETTER CONDITION.

5. THE INTENT OF THIS PLAN SET IS TO DESCRIBE THE COMPLETED SITE WORK TO BE PERFORMED UNDER THE CONTRACT. UNLESS OTHERWISE PROVIDED, THE CONTRACTOR SHALL FURNISH ALL MATERIALS, SUPPLIES, TOOLS, EQUIPMENT AND LABOR NECESSARY FOR THE PROPER PROSECUTION AND COMPLETION OF THE WORK.

6. CONTRACTOR IS RESPONSIBLE TO REPORT ANY CONFLICTS WITHIN PLANS OR SPECIFICATIONS AND AWAIT WRITTEN INSTRUCTION FROM ENGINEER OR ARCHITECT PRIOR TO CONSTRUCTION OF THE ELEMENT IN QUESTION.

7. CONTRACTOR IS TO CONTACT COLLEGE STATION UTILITIES & CITY OF COLLEGE STATION DEVELOPMENT ENGINEERING DEPARTMENT AT LEAST 48 HOURS PRIOR TO STARTING CONSTRUCTION.

8. ALL ITEMS TO BE REMOVED DURING CLEARING AND GRUBBING – REMOVE NOT ONLY THE ABOVE GROUND ELEMENTS, BUT ALL UNDERGROUND ELEMENTS AS WELL. WHERE TREES & BRUSH ARE TO BE REMOVED, REMOVE THE TOTAL EXTENT OF THEIR ROOT SYSTEMS. UNLESS OTHERWISE DIRECTED BY THE OWNER, ALL MATERIALS AND DEBRIS DEMOLISHED AND/OR REMOVED SHALL BECOME THE PROPERTY OF THE CONTRACTOR AND SHALL BE REMOVED FROM THE SITE AND DISPOSED OF IN A MANNER SATISFACTORY TO THE OWNER, ARCHITECT & ENGINEER. ON–SITE BURNING WILL NOT BE PERMITTED.

9. ALL EXCESS TOPSOIL AND CUT MATERIAL IS TO BE HAULED OFF AND DISPOSED OF OFF–SITE.

10. CONTRACTOR TO MAINTAIN A SAFE AND SECURE SITE. TRENCHES ARE NOT TO REMAIN OPEN PAST WORKING HOURS. CONTRACTOR IS TO FENCE OFF STORAGE AREA FOR MATERIALS AND EQUIPMENT.

11. LIMITS OF WORK: CONTRACTOR IS TO CONFINE ALL WORK, MATERIALS AND EQUIPMENT TO EXISTING EASEMENT AREAS OR OWNER'S PROPERTY. NO CONSTRUCTION ACTIVITY OR STORAGE IS ALLOWED ON OR THROUGH PRIVATE PROPERTY UNLESS COVERED BY A PUBLIC UTILITY EASEMENT OR OTHER DOCUMENTED AGREEMENT FROM ADJACENT LANDOWNERS. CONTRACTOR IS RESPONSIBLE TO COORDINATE WITH ADJACENT LANDOWNERS.

12. CONTRACTOR SHALL PREVENT TRANSPORT OF SEDIMENT TO ADJACENT PROPERTIES AND PUBLIC OR PRIVATE RIGHT OF WAYS AND IS RESPONSIBLE FOR CLEANUP IF SUCH OCCURS. CONTRACTOR IS TO INSURE NO CONSTRUCTION DEBRIS OR MUD IS TRACKED OR DISCARDED ON TO ANY PUBLIC OR PRIVATE STREETS OR LAND AND IS RESPONSIBLE FOR SITE CLEANUP AFTER EACH DAYS WORK. CONTRACTOR IS TO MAKE USE OF BEST MANAGEMENT PRACTICES TO PREVENT SEDIMENT FROM LEAVING THE SITE OR ENTERING EXISTING STORM SEWER OR DOWNSTREAM CHANNEL AREA. CONTRACTOR SHALL MAINTAIN EROSION CONTROL THROUGHOUT CONSTRUCTION PERIOD AND UNTIL GRASS IS ESTABLISHED.

13. CONTRACTOR IS TO RE–SEED OR LANDSCAPE ALL DISTURBED AREAS FOR RE–ESTABLISHMENT OF VEGETATION IN ACCORDANCE WITH EROSION CONTROL AND/OR LANDSCAPE PLAN. CONTRACTOR TO DISK AREAS TO BE SEEDED TO A DEPTH OF 6". CONTRACTOR TO GUARANTEE COVERAGE AND ESTABLISHMENT OF GRASS FOR A PERIOD OF 6 MOS. COVERAGE SHALL BE DEFINED AS 95% OF THE PLANTED AREA WITH UNIFORM COVERAGE OF GRASS GREATER THAN 1" IN HEIGHT WITH NO BARE SPOTS GREATER THAN 2 SF.

14. CONTRACTOR SHALL BE RESPONSIBLE FOR THE CONTAINMENT AND PROPER DISPOSAL OF ALL LIQUID AND SOLID WASTE ASSOCIATED WITH THIS PROJECT. THE CONTRACTOR SHALL USE ALL MEANS NECESSARY TO PREVENT THE OCCURRENCE OF WIND BLOWN LITTER FROM THE PROJECT SITE.

15. ALL ITEMS/WORK ELEMENTS NOT INDICATED AS "EXISTING" ARE TO BE FURNISHED AND INSTALLED/CONSTRUCTED BY THE CONTRACTOR.

16. ALL ITEMS NECESSARY FOR PROPER COMPLETION OF THE WORK NOT SPECIFICALLY CALLED FOR OR SPECIFIED ON THE PLANS ARE THE RESPONSIBILITY OF THE CONTRACTOR AND CONSIDERED SUBSIDIARY TO THE WORK.

17. PRIOR TO JOB CLOSEOUT, A SET OF "AS–BUILT" CONSTRUCTION PLANS MUST BE SUBMITTED TO THE OWNER FOR THE ENTIRE PROJECT. IT IS THE RESPONSIBILITY OF THE CONTRACTOR TO SUBMIT A SET OF "RED LINE" SITE/CONSTRUCTION PLANS SHOWING THE AS–BUILT CONDITIONS AT LEAST ONE WEEK PRIOR TO JOB CLOSEOUT. AS–BUILT DRAWINGS TO INCLUDE ALL PIPING, PAVING AND ANY OBSTRUCTIONS ENCOUNTERED OR INSTALLED DURING CONSTRUCTION. ADDITIONALLY, A SET OF "AS–BUILT" CONSTRUCTION PLANS FOR THE PUBLIC INFRASTRUCTURE MUST BE SUBMITTED TO THE CITY OF COLLEGE STATION BY THE ENGINEER. CONTRACTOR IS TO SUBMIT A SET OF "RED LINE" DRAWINGS FOR THE PUBLIC INFRASTRUCTURE TO CIVIL ENGINEERING CONSULTANTS AT LEAST ONE WEEK PRIOR TO JOB CLOSEOUT.

18. ASSUMED MINIMUM BURY FOR UTILITIES (CONTRACTOR TO VERIFY EXACT REQUIREMENTS):
SUDDENLINK – 2' BURY
SUDDENLINK FIBER OPTIC – 4' BURY
VERIZON – 3'
UNDERGROUND PRIMARY ELECTRIC LINE – 4' BURY
UNDERGROUND ELECTRIC SERVICE – 3' BURY
GAS – 3' BURY
WATERLINE – 4' BURY

SITE SPECIFIC NOTES

1. THE EXISTING GROUND TOPOGRAPHY SHOWN ON THIS SET OF PLANS IS BASED ON AN ON THE GROUND SURVEY CONDUCTED DECEMBER 12TH, 2015 BY CIVIL ENGINEERING CONSULTANTS (BASIS OF ELEVATION–NAVD88). PRIOR TO CLEARING OF THE CONSTRUCTION AREA, IT IS THE SOLE RESPONSIBILITY OF THE CONTRACTOR TO DETERMINE THE IMPACT, IF ANY, CLEARING & GRUBBING WILL HAVE ON THE DESIGN SHOWN HEREON. THE CONTRACTOR MUST INSURE THAT ALL SUBSURFACE DEBRIS HAVE BEEN COMPLETELY REMOVED.

2. CONTRACTOR SHALL COORDINATE WITH CSU, VERIZON, SUDDENLINK, & ATMOS GAS FOR EXACT DESIGN & INSTALLATION OF ALL CONDUIT, LINE, METERS, ETC.

3. SHOULD RELOCATION OR ADJUSTMENTS OF PUBLIC AND PRIVATE UNDERGROUND UTILITIES (WATERLINE, ATMOS GAS LINE, VERIZON TELEPHONE LINE, ETC.) BE REQUIRED, CONTRACTOR IS RESPONSIBLE FOR COORDINATING WITH FACILITY OWNERS AND ANY RELOCATION, REMOVAL, AND INSTALLATION, OR ADJUSTMENTS TO ALL EXISTING FACILITIES REQUIRED FOR PROSECUTION OF THE WORK. CONTRACTOR IS TO MAINTAIN STRUCTURAL INTEGRITY OF ALL PIPELINES, ELECTRIC POLES AND LINES, LIGHT POLES, PERMANENT AND TEMPORARY UTILITIES.

4. IN THE EVENT ELECTRICAL ROUTING OR PLAN ELEMENTS SHOWN IN CIVIL PLANS DIFFERS FROM THAT SHOWN ON CSU ELECTRICAL PLANS, CSU ELECTRICAL PLANS SHALL GOVERN.

5. THE CONTRACTOR IS RESPONSIBLE FOR COORDINATING INSTALLATION OF ALL PUBLIC AND PRIVATE UTILITIES AND FRANCHISE UTILITIES WITH EARTHWORK & PAVEMENT CONSTRUCTION. CONTRACTOR IS RESPONSIBLE FOR DETERMINING NECESSITY, FURNISHING & INSTALLING ANY NECESSARY UTILITY, LIGHTING OR IRRIGATION CONDUIT PRIOR TO SUBGRADE PREPARATION & PAVING OPERATION. CONTRACTOR IS RESPONSIBLE FOR DETERMINATION OF UTILITY INSTALLATION ORDER. MARK ALL UTILITY STUB–OUTS AND CONDUIT ENDS WITH PAINTED PVC EXTENDING 4' ABOVE FINISHED GRADE PER THE SITE PLAN.

6. TRENCH BACKFILL SHALL BE COMPACTED TO 98% STANDARD (ASTM D–698) IN ALL AREAS. TESTS ARE TO BE CONDUCTED EVERY 200' FOR EVERY 24" OF THICKNESS. BACKFILL MATERIAL TO BE PLACED IN 6" LIFTS.

7. ALL CONDUIT INSTALLED WITHIN AREAS TO BE PAVED SHALL HAVE TRENCHES BACKFILLED WITH CEMENT STABILIZED SAND. WHERE CEMENT STABILIZED SAND IS REQUIRED, THE CEMENT STABILIZED SAND SHALL HAVE A MINIMUM OF 10% CEMENT PER CUBIC YARD OF CEMENT STABILIZED SAND MIXTURE BASED ON LOOSE DRY WEIGHT VOLUME (AT LEAST 2.5 BAGS OF CEMENT PER CUBIC YARD OF MIXTURE)

8. CONTRACTOR SHALL REFER TO OWNER'S ELECTRICIAN/ELECTRICAL PLANS FOR FINAL TYPES & LOCATIONS OF ALL SITE LIGHTING LOCATIONS AND CONDUIT ROUTING. CONTRACTOR TO FURNISH & INSTALL ALL ELEMENTS OF SITE LIGHTING AND RUN ALL NECESSARY ELECTRICAL CONDUIT, WIRES, ETC. SO THAT THE LIGHTS ARE OPERATIONAL.

9. CONTRACTOR SHALL FURNISH & INSTALL ALL ELEMENTS OF SITE IRRIGATION SYSTEM AND RUN ALL NECESSARY CONDUIT, PIPING, WIRES, ETC. SO THAT THE IRRIGATION SYSTEM IS OPERATIONAL. REFER TO SEPARATE IRRIGATION PLAN (BY OTHERS) FOR IRRIGATION SYSTEM DESIGN.

10. SITE DRAINAGE FACILITIES AND DRAINAGE STRUCTURES ARE DESIGNED IN ACCORDANCE WITH CURRENT CITY OF COLLEGE STATION DRAINAGE POLICY. DETENTION WILL BE ACCOMPLISHED WITHIN THE SITE SPECIFIC DETENTION AREA.

11. PRIOR TO REVEGETATION OPERATIONS, CONTRACTOR TO SPREAD/REPLACE AND CONSOLIDATE TOPSOIL TO A DEPTH OF 6".

12. ALL DISTURBED AREAS ARE TO HAVE ESTABLISHMENT OF GRASS AS OUTLINED BELOW OR IF WITHIN/ADJACENT TO LANDSCAPE AREAS–PER THE LANDSCAPE PLAN. CONTRACTOR IS RESPONSIBLE FOR WATERING, MAINTENANCE AND ESTABLISHMENT OF VEGETATION FOR A PERIOD OF 90 DAYS. CONTRACTOR TO GUARANTEE ALL PLANTED MATERIAL GROWTH AND COVERAGE FOR A PERIOD OF 6 MONTHS. GROWTH AND COVERAGE SHALL BE DEFINED AS 95% OF THE PLANTED AREA WITH UNIFORM COVERAGE OF GRASS GREATER THAN 1" IN HEIGHT WITH NO BARE SPOTS GREATER THAN 2 SQUARE FEET. SECOND APPLICATION OF HYDROMULCH OR SOD IS REQUIRED FOR BARE SPOTS NOT MEETING COVERAGE REQUIREMENT WITHIN 60 DAYS OF INITIAL APPLICATION.

13. ALL DISTURBED AREAS NOT TO BE PAVED OR LANDSCAPED ARE TO BE PREPARED AND HYDROMULCH SEEDED FOR PERMANENT ESTABLISHMENT OF VEGETATION. PRIOR TO HYDROMULCH OPERATIONS, CONTRACTOR TO REPLACE AND CONSOLIDATE TOPSOIL TO A DEPTH OF 6". TOPSOIL TO BE DISKED TO A DEPTH OF 4" PRIOR TO SEEDING. FINAL GRADES WITH ESTABLISHED VEGETATION SHALL PROVIDE POSITIVE DRAINAGE.

REVEGETATE PER B/CS UNIFIED TECHNICAL SPECIFICATIONS – SPEC #32–92–19 SEEDING FOR EROSION CONTROL.

14. TENNANT/END USER SHALL MAINTAIN EROSION CONTROL UNTIL ALL LANDSCAPE AREAS ARE ESTABLISHED. TENNANT/END USER IS RESPONSIBLE FOR CLEANUP FROM LANDSCAPING MATERIALS, MULCH OR LANDSCAPE SEDIMENT TRANSPORT THAT MAY OCCUR AFTER LANDSCAPE INSTALLATION INCLUDING MAINTENANCE OF GRATES AND TRENCH DRAINS.

15. CONTRACTOR IS RESPONSIBLE FOR SUBMITTING N.O.I/N.O.T. (IF NECESSARY) TO T.C.E.Q. & PROVIDING DOCUMENTATION OF SUBMISSION TO THE CITY OF COLLEGE STATION.

WATER LINE NOTES

1. WATER SERVICE MATERIAL TO BE TYPE "K" COPPER TUBING.

2 ALL VALVE & METER BOXES ARE TO BE INSTALLED OR ADJUSTED FLUSH WITH FINISHED GRADES.

3 ALL VALVE BOXES ARE TO SET IN A 24"X24"X6" CONCRETE PAD AT FINISHED GRADE.

4.PLUG AND MARK SERVICE ENDS AT SURFACE WITH 2" PVC PIPE PAINTED BLUE EXTENDING 4' ABOVE GROUND.

STORM SEWER NOTES

1. STORM SEWER MATERIAL SHALL BE AS FOLLOWS FOR THE FOLLOWING INSTALLATIONS:
HIGH DENSITY POLYETHYLENE CORRUGATED PIPE (HDPE) W/SMOOTH WALL INTERIOR, MEETING ASTM D2412 WITH WATER TIGHT JOINTS & FITTINGS (ADS N–12, WT WATER TIGHT)
REINFORCED CONCRETE PIPE (RCP) ASTM C76, CLASS IV, RUBBER GASKETED JOINT
CONCRETE FOR STRUCTURES (INLETS, CATCH BASINS, JUNCTIONS, ETC.)
MIN 4000 PSI–28 DAY STRENGTH FOR ITEMS UP TO 10' DIMENSION
MIN 5000 PSI–28 DAY STRENGTH FOR ITEMS WITH GREATER THAN 10' DIMENSION

2. TRENCH BACKFILL SHALL BE COMPACTED TO 98% STANDARD (D–698) OR BE CEMENT STABILIZED SAND UNDER AREAS TO BE PAVED & WITHIN 2' OF PAVING OR SIDEWALK. ALL OTHER AREAS SHALL BE COMPACTED TO 95% STANDARD (ASTM D–698). TESTS ARE TO BE CONDUCTED EVERY 100' FOR EVERY 24" OF THICKNESS (MIN). BACKFILL MATERIAL TO BE PLACED IN 6" LIFTS.

3. CONTRACTOR IS TO USE SILT FENCING AROUND INLET AND JUNCTION BOXES AND GRAVEL FILLED PERMEABLE BAGS AROUND INLET BOXES (AS NECESSARY) TO PREVENT SEDIMENT FROM ENTERING STORM SEWER SYSTEM. PRIOR TO ACCEPTANCE OF PROJECT FOR SUBSTANTIAL COMPLETION, CONTRACTOR IS TO CLEAN ALL STORM SEWER FACILITIES OF SEDIMENT.

A GEOTECHNICAL INVESTIGATION OF THE SITE SURFICIAL & SUBSURFACE SOILS HAS NOT BEEN RECEIVED BY CIVIL ENGINEERING CONSULTANTS. TO ENSURE PROPER SUBGRADE PREPARATION, PRIOR TO CONSTRUCTION, IT IS RECOMMENDED THAT A GEOTECHNICAL INVESTIGATION BE OBTAINED BY THE OWNER FROM AN INDEPENDENT GEOTECHNICAL CONSULTANT. A GEOTECHNICAL ENGINEER'S RECOMMENDATIONS REGARDING SUBGRADE SUITABILITY, STRENGTH, AND ANY NECESSARY STABILIZATION SHOULD BE OBTAINED IN A CERTIFIED REPORT.

THE FOLLOWING EARTHWORK & PAVEMENT NOTES ARE TYPICAL REQUIREMENTS FOR THIS AREA. ACTUAL REQUIREMENTS SHALL BE AS OUTLINED IN THE GEOTECHNICAL CONSULTANT.

EARTHWORK NOTES

1. REMOVE 1' OF EXISTING MATERIAL AND REPLACE WITH 2' OF COMPACTED SELECT FILL. WET TO ACHIEVE COMPACTION MAY BE STOCKPILED OR SPREAD AND ALLOWED TO DRY. ASSIST DRYING BY DISCING, HARROWING OR PULVERIZING UNTIL MOISTURE CONTENT IS REDUCED TO A SATISFACTORY VALUE. ALTERNATE METHODS TO ACHIEVE THE END RESULT OF SPECIFIED MOISTURE CONTENT AND COMPACTION MAY ALSO BE USED.

2. FOUR DIFFERENT METHODS MAY BE UTILIZED TO SUCCESSFULLY COMPACT THE SOIL. THEY INCLUDE THE PROCESSES OF STATIC WEIGHT, KNEADING ACTION, IMPACT, OR VIBRATION. THE SOIL MUST BE COMPACTED USING A COMPACTOR IN ACCORDANCE WITH THE ASTM STANDARDS. A COMPACTOR IS REQUIRED TO COMPACT THE SOIL TO SUCH A LARGE DEGREE. TRACK EQUIPMENT SUCH AS BULL DOZERS APPLY PRESSURE ACROSS A LARGE SURFACE AREA AND ARE THEREFORE LIMITED IN THEIR CAPABILITIES COMPARED TO A COMPACTOR. IF THE SELECT FILL IS NOT COMPACTED PROPERLY, THE FILL MATERIAL AND STRUCTURES CONSTRUCTED ON IT ARE SUBJECT TO SIGNIFICANT SETTLEMENT.

3. FOR STIFFENED SLAB ON GRADE AT THIS SITE, IT IS RECOMMENDED THAT A MINIMUM OF 1' OF EXISTING MATERIAL BE REMOVED AND MINIMUM OF 2' OF SELECT FILL BE COMPACTED IN PLACE TO FORM A LEVEL BUILDING PAD. FOR JOINTED SLAB ON GRADE AT THIS SITE, IT IS RECOMMENDED THAT A MINIMUM OF 6"–18" OF EXISTING SANDY LOAM BE REMOVED AND SELECT FILL BE COMPACTED IN PLACE TO FORM A LEVEL BUILDING PAD. IN ADDITION, THE BOTTOM 12" OF THE EXCAVATION SHALL BE LIME STABILIZED.

4. SELECT FILL TO BE UTILIZED BENEATH THE STIFFENED SLAB ON GRADE LIMITS SHOULD CONSIST OF A LOW PLASTICITY CLAYEY SOIL WITH A PLASTICITY INDEX BETWEEN FIVE AND 20, A MAXIMUM GRAVEL CONTENT (PERCENTAGE RETAINED ON NO. 4 SIEVE) OF 40 PERCENT, AND ROCKS NO LARGER THAN TWO INCHES IN THEIR LARGEST DIMENSION; OR A CRUSHED LIMESTONE BASE MATERIAL MEETING THE REQUIREMENTS OF THE TEXAS DEPARTMENT OF TRANSPORTATION (TXDOT) 2004 STANDARD SPECIFICATIONS ITEM 247, TYPE A, GRADE 4. ALTERNATIVELY, A LOW–PLASTICITY GRANULAR FILL MATERIAL WHICH DOES NOT MEET THESE SPECIFICATIONS MAY BE UTILIZED ONLY IF APPROVED BY GESSNER ENGINEERING.

5. ALL STRUCTURAL FILL SHOULD BE PLACED ON PREPARED SURFACES IN LIFTS NOT TO EXCEED EIGHT INCHES LOOSE MEASURE, WITH COMPACTED THICKNESS NOT TO EXCEED SIX INCHES. SELECT FILL SHOULD BE COMPACTED TO AT LEAST 95 PERCENT OF THE STANDARD PROCTOR (ASTM D 698) DENSITY AT A MOISTURE CONTENT RANGING WITHIN TWO PERCENT OF OPTIMUM MOISTURE CONTENT FOR DEPTHS OF THREE FEET OR LESS. IF FILL IN EXCESS OF THREE FEET IS REQUIRED, ALL STRUCTURAL AND SELECT FILL DEEPER THAN THREE FEET SHALL BE COMPACTED TO 100 PERCENT OF STANDARD PROCTOR (ASTM D 698).

6. GESSNER ENGINEERING RECOMMENDS THE USE OF LIME FOR THE TREATMENT OF THE SUB–SURFACE CLAY SUBGRADE TO REDUCE THE EXPANSIVE POTENTIAL OF THE SUBGRADE AS WELL AS PROVIDE A BARRIER TO REDUCE MOISTURE INFILTRATION. THE SUBGRADE SHOULD BE TREATED WITH MINIMUM OF 5% LIME BY WEIGHT MEETING THE REQUIREMENTS OF TXDOT 2004 STANDARD SPECIFICATIONS ITEM 260. LIME TREATMENT SHALL BE ACCOMPLISHED SUCH THAT A UNIFORM SUBGRADE MIX IS OBTAINED. THE LIME SHOULD INITIALLY BE BLENDED WITH A MIXING DEVICE SUCH AS A PULVERMIXER AND SUFFICIENT WATER ADDED.

7. THE TREATED SUBGRADE SHOULD BE COMPACTED TO A MINIMUM OF 95 PERCENT OF THE MAXIMUM DENSITY AS DETERMINED BY THE MOISTURE/DENSITY RELATION (ASTM D698) AT +1 TO +3 PERCENT ABOVE OPTIMUM MOISTURE CONTENT.

8. CONSTRUCTION AREAS SHOULD BE STRIPPED OF ALL VEGETATION, LOOSE TOPSOIL, SURFICIAL CONCRETE, ETC. ROOTS OF TREES TO BE REMOVED WITHIN CONSTRUCTION AREAS SHOULD BE EXCAVATED AND REMOVED FROM THE CONSTRUCTION ONCE FINAL SUBGRADE ELEVATION HAS BEEN ACHIEVED, EXPOSED SOIL SUBGRADE AREAS SHALL BE PROOFROLLED WITH A 15 TON ROLLER (MINIMUM) OR EQUIVALENT EQUIPMENT AS APPROVED BY THE ENGINEER TO DETECT WEAK ZONES. WEAK AREAS DETECTED DURING THE PROOFROLLING PROCESS, AS WELL AS ZONES CONTAINING DEBRIS AND/OR ORGANICS AND VOIDS RESULTING FROM REMOVAL OF TREE ROOTS, ETC., SHOULD BE REMOVED AND REPLACED WITH SOILS EXHIBITING SIMILAR CLASSIFICATION, MOISTURE CONTENT, AND DENSITY AS THE ADJACENT IN SITU SOILS.

9. THE MINIMUM AMOUNT OF SELECT FILL SHALL BE PLACED TO EVENLY BUILD UP THE PAD. SELECT FILL AMOUNTS MAY BE INCREASED TO RAISE THE BUILDING PAD TO THE DESIRED FINISHED FLOOR ELEVATION, OR TO DECREASE THE MOVEMENT POTENTIAL OF THE SITE.

10. IF REQUIRED, FILL USED BENEATH PAVEMENT SHALL HAVE A PLASTICITY INDEX BETWEEN FIVE AND 30. ANY FILL BENEATH PAVEMENT SHALL BE COMPACTED TO A MINIMUM OF 95 PERCENT OF THE MAXIMUM DENSITY AS DETERMINED BY THE MODIFIED MOISTURE/DENSITY RELATION (ASTM D 1557) AT –2 TO +2 PERCENT OF THE OPTIMUM MOISTURE CONTENT. (AS AN ALTERNATE, COMPACTION TO AT LEAST 98 PERCENT OF THE ASTM D–698 MAXIMUM DRY DENSITY MAY BE CONSIDERED). THE TOP PORTION OF FILL SHALL BE CHEMICALLY STABILIZED AS RECOMMENDED IN THE "PAVEMENT" SECTION.

11. FOR SITE AREAS NOT BELOW PAVEMENTS OR STRUCTURES, GENERAL FILL MAY BE USED TO ACHIEVE THE DESIRED GRADE. GENERAL FILL SHALL HAVE A PLASTICITY INDEX NO GREATER THAN 30, AND SHALL BE FREE OF DEBRIS AND ORGANICS. ALL GENERAL FILL SHOULD BE PLACED ON PREPARED SURFACES IN LIFTS NOT TO EXCEED EIGHT INCHES LOOSE MEASURE, WITH COMPACTED THICKNESS NOT TO EXCEED SIX INCHES. GENERAL FILL SHOULD BE COMPACTED TO AT LEAST 92 PERCENT OF THE STANDARD PROCTOR (ASTM D 698) DENSITY AT A MOISTURE CONTENT RANGING WITHIN TWO PERCENT OF OPTIMUM MOISTURE CONTENT.

12. GENERAL FILL WITHIN FIVE FEET OF THE FOUNDATION PERIMETER FOR THE TOP FOOT OF SOIL MAY BE INSTALLED AS A CLAY CAP ON FILL MATERIALS TO PREVENT MIGRATION OF SURFACE WATER BENEATH THE STRUCTURE. THIS MATERIAL SHALL BE PLACED AS NOTED ABOVE, AND SHALL HAVE A PLASTICITY INDEX IN EXCESS OF 30. THE FILL SHALL BE FREE OF DEBRIS AND ORGANICS, AND SHALL BE PLACED TO COMPLY WITH THE DRAINAGE SECTION OF THIS REPORT.

13. THE UPPER PORTION OF UTILITY EXCAVATIONS SHOULD BE BACKFILLED WITH PROPERLY COMPACTED CLAY SOILS TO MINIMIZE INFILTRATION OF SURFACE WATER. A CLAY "PLUG" SHOULD BE PROVIDED IN THE TRENCH ON THE EXTERIOR OF THE BUILDING TO PREVENT WATER FROM GAINING ACCESS ALONG THE TRENCH TO THE SUBGRADE BENEATH THE STRUCTURE. THIS PLUG SHALL EXTEND TWO FEET BEYOND THE PIPE FACE IN ALL DIRECTIONS, AND BE A MINIMUM OF TWO FEET THICK.

PAVEMENT NOTES

1. CONCRETE SHALL BE 4000 PSI, 28 DAY STRENGTH PORTLAND CEMENT CONCRETE. TEST CYLINDERS SHALL BE TAKEN 1 SET OF 3 PER 100 CY OF CONCRETE PLACED OR A MINIMUM OF 1 SET OF 3 PER STRUCTURE AT TIME OF POUR.

2. CONTRACTOR SHALL EXCLUDE TRAFFIC FROM CONCRETE PAVEMENT BY MEANS OF BARRICADES AND SIGNS UNTIL CONCRETE IS AT LEAST 14 DAYS OLD. CONSTRUCTION TRAFFIC SHALL BE EXCLUDED UNTIL CONCRETE HAS REACHED DESIGN STRENGTH.

3. CONTRACTOR SHALL PAINT STRIPING FOR THE PARKING AREA AS INDICATED ON THE PLAN. THE SOLID LINE REPRESENTS A 4" WIDE SOLID WHITE LINE TO BE PAINTED. CONTRACTOR IS RESPONSIBLE TO PAINT HANDICAP MARKINGS AND LOADING ZONES IN CONFORMANCE WITH CURRENT ADA/TAS STANDARDS AND ALL FIRE LANE MARKINGS IN ACCORDANCE WITH CITY OF COLLEGE STATION REQUIREMENTS.

4. MATERIAL AND METHODS FOR PAVEMENT MARKINGS SHALL CONFORM TO ITEM 666 OF THE TxDOT STANDARD SPECIFICATIONS FOR CONSTRUCTION OF HIGHWAYS, STREETS, AND BRIDGES, WITH THE FOLLOWING EXCEPTIONS: 1) TYPE II MARKING MATERIALS NEED NOT BE PURCHASED FROM THE DEPARTMENT, AND 2.) GLASS BEADS MAY BE OMITTED. MARKING MATERIAL SHALL BE TYPE II PAINT–TYPE MATERIAL.

CONSTRUCTION TESTING RECOMMENDATIONS:

1. THE OWNER SHALL OBTAIN AN INDEPENDENT TESTING LABORATORY TO CONDUCT ALL MATERIALS/COMPACTION TESTING. CONTRACTOR IS RESPONSIBLE TO NOTIFY AND COORDINATE WITH LABORATORY IN ADVANCE OF WHEN OPERATIONS WILL BE PERFORMED. INITIAL TESTING SHALL BE PAID FOR BY THE OWNER, FAILED TESTS AND RE–TESTS SHALL BE PAID FOR BY THE CONTRACTOR. WORK WILL NOT BE ACCEPTABLE FOR PAYMENT WITHOUT PASSED TEST RESULTS. COPIES OF RESULTS TO BE DELIVERED TO OWNER AND CIVIL ENGINEERING CONSULTANTS.

2. SUB–GRADE MATERIAL / GENERAL FILL: OPTIMUM MOISTURE/DENSITY RELATIONSHIP TO BE DETERMINED AT RATE OF ONE SAMPLE PER MATERIAL ENCOUNTERED. IN–PLACE DENSITY & MOISTURE CONTENT TESTS TO BE TAKEN AT A RATE OF 1 (MINIMUM) FOR EVERY 250 SY FOR EACH 6" OF COMPACTED THICKNESS.

3. SUBGRADE STABILIZATION: A LIME OR CEMENT SERIES SHALL BE RUN TO DETERMINE THE EXACT AMOUNT OF LIME OR CEMENT TO BE ADDED TO THE SUBGRADE PRIOR TO COMMENCEMENT OF STABILIZATION. IN–PLACE DENSITY & MOISTURE CONTENT TESTS TO BE TAKEN AT A RATE OF 1(MINIMUM) FOR EVERY 250 SY FOR EACH 6" OF COMPACTED THICKNESS.

4. CONCRETE: TEST CYLINDERS TO BE TAKEN AT A RATE OF 1 SET OF 3 PER 100 CY OF CONCRETE PLACED OR A MINIMUM OF 1 SET OF 3 PER STRUCTURE AT TIME OF POUR.

DESIGNED BY:	SJH
DRAWN BY:	SJH
APPROVED:	AAP
JOB NO:	E0559200

D O N D U R D E N , I N C
d.b.a. CIVIL ENGINEERING CONSULTANTS
4101 S. TEXAS AVE, SUITE A
BRYAN, TEXAS 77802
TEL: (979) 846-6212
FAX: (979) 846-8252
REGISTRATION #F-2214
SAN ANTONIO / LAREDO
BRYAN / COLLEGE STATION

THIS DOCUMENT IS RELEASED UNDER THE AUTHORITY OF ALFRED A. PAINE, P.E. 97221 ON 9/7/2016 FOR THE PURPOSE OF INTERIM REVIEW. –NOT FOR CONSTRUCTION–

REV	DATE	DESCRIPTION

CAMPING MAXX
SHULMAN INDUSTRIAL PARK (34.19 ACRES)
PHASE ONE
NOTES & DETAILS
BRYAN, BRAZOS COUNTY, TEXAS

SHEET NO.
C6.1

<:\data\BCS\Proj_2016\E0559200_SHULMAN INDUSTRIAL PARK – FM 2818\cadd\Engineering\E0559200 – C6.1–6.2 Notes & Details.dwg – September 7, 2016

STANDARD FIRE HYDRANT ASSEMBLY

GENERAL NOTES:

1. FINLEY DIVIDED EARTH FREE OF ROCK, LUMPS AND CLODS EXCEEDING 6" SHALL BE PLACE BY HAND, AND COMPACTED AROUND THE CAST IRON PIPE TO A DEPTH OF 12" OVER THE TOP OF THE PIPE BEFORE BACKFILL IS BEGUN BY ANY MECHANICAL EQUIPMENT.
2. ALL CONCRETE BLOCKING SHALL BE 28 DAY STRENGTH = 2000 psi.
3. ALL THRUST BLOCKING SHALL PROVIDE A MINIMUM OF 2 SQUARE FEET OF BEARING AREA OF CONCRETE ON UNDISTURBED SOIL, OR AS DIRECTED BY THE ENGINEER.
4. WATER MAINS WILL NOT BE FULLY PRESSURIZED UNTIL CONCRETE HAS REACHED 7 DAY STRENGTH.
5. ALL PIPE WILL BE LAID SO AS THE ENTIRE BARREL WILL HAVE FULL BEARING ON THE FINE GRADED TRENCH BOTTOM. BELL HOLES SHALL BE CUT FOR EACH BELL AND FIRE HYDRANT.
6. ALL FITTINGS SHALL BE MECHANICAL JOINTS UNLESS OTHERWISE DIRECTED.
7. HYDRANTS SHALL BE LOCATED NO CLOSER THAN 3 FEET MEASURED FROM THE BACK OF CURB TO THE FACE OF THE STEAMER ON THE FIRE HYDRANT.
8. IF MAIN VALVE IS WITHIN 50 FEET OF FIRE HYDRANT THEN ASSEMBLY VALVE MAY BE OMITTED ON A DEAD END HYDRANT LEAD WITH NO ADDITIONAL CONNECTIONS.
9. HEIGHT OF FIRE HYDRANT MEASURED FROM THE STEAMER NOZZLE SHALL BE 18 TO 24 INCHES ABOVE NEAREST FINAL GRADE.

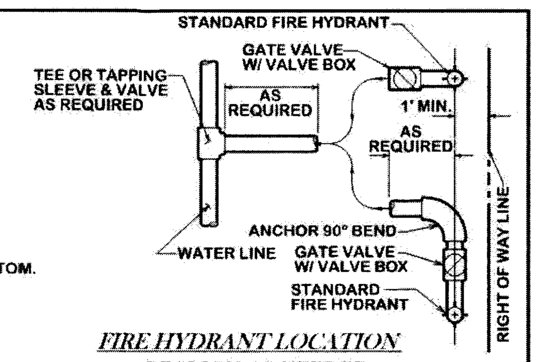

FIRE HYDRANT LOCATION
REALIGN AS NEEDED

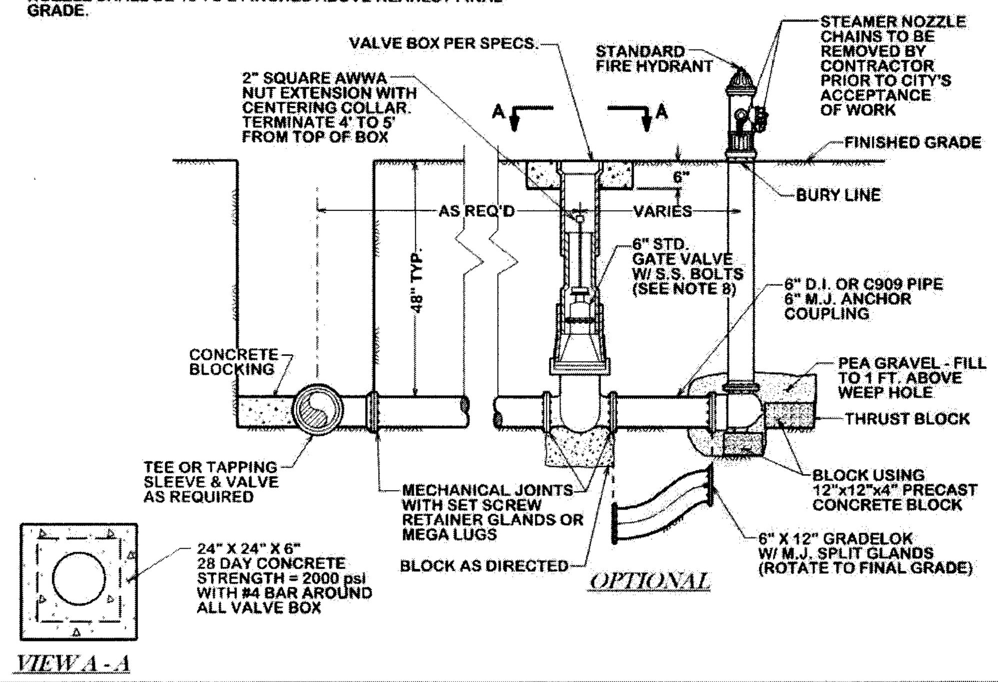

CITY OF BRYAN | STANDARD FIRE HYDRANT ASSEMBLY | DATE AUG. 2012 | B/CS UNIFIED STANDARD DETAIL | DETAIL NO. W1-02 | CITY OF COLLEGE STATION

GATE VALVE & BOX

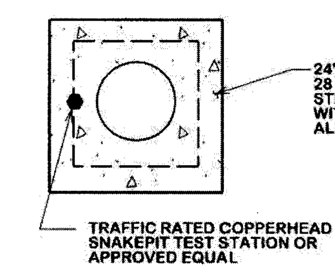

VIEW A - A

NOTE:

1. VALVE EXTENSION TO BE USED ONLY WHEN TOP OF GATE VALVE IS DEEPER THAN 5 FEET FROM FINISHED GRADE.
2. ALL VALVE OPERATING NUT EXTENSIONS ARE TO BE MADE OF STEEL, SIZED AS NOTED, AND PAINTED WITH TWO (2) COATS OF METAL PAINT.
3. EXTENSIONS SHALL BE A MINIMUM OF ONE (1) FOOT LONG.
4. VALVE BOX LIDS LOCATED ON VALVES TO ISOLATE FIRE SUPPRESSION LINES FROM PUBLIC WATER LINES SHALL BE AMPro USA, LL562 LOCKABLE LID.

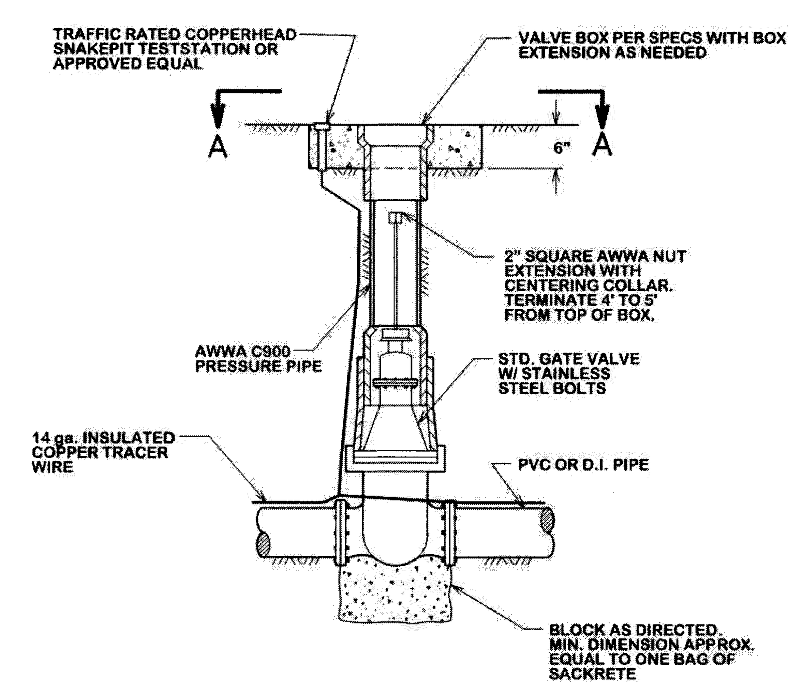

CITY OF BRYAN | GATE VALVE & BOX | DATE AUG. 2012 | B/CS UNIFIED STANDARD DETAIL | DETAIL NO. W1-00 | CITY OF COLLEGE STATION

BEDDING AND TRENCH FOR DI PIPE & PVC PIPE WITHIN NON-STRUCTURAL OR NEW PAVED AREAS

Ⓐ SELECT MATERIAL
MATERIAL EXCAVATED FROM THE DITCH, (WHICH IS FREE OF ROCKS, LUMPS, CLODS, OR DEBRIS LARGER THAN TWO (2) INCHES IN THE LARGEST DIMENSION) COMPACTED TO A MINIMUM OF 90% OF MAXIMUM DENSITY AS DETERMINED BY ASTM D698 (STANDARD) AT A MOISTURE CONTENT WITHIN OPTIMUM TO + 4% OF OPTIMUM UNDER NON-STRUCTURAL AREAS (ie...YARDS, PASTURES, EASEMENTS) AND TO A MINIMUM OF 98% OF MAXIMUM DENSITY AS DETERMINED BY ASTM D698 (STANDARD) AT A MOISTURE CONTENT WITHIN OPTIMUM TO +4% OF OPTIMUM UNDER NEW STREET AREAS AND STREETS TO BE RECONSTRUCTED.

Ⓑ GRANULAR MATERIAL
MATERIAL SHALL BE BANK RUN RIVER SAND WHICH IS FREE OF DETRIMENTAL QUANTITIES OF CLAY, DEBRIS, OR ORGANIC MATERIAL AND WHICH, WHEN TESTED BY STANDARD LABORATORY METHODS, MEET THE FOLLOWING REQUIREMENTS:

MAXIMUM LIQUID LIMIT	45
MAXIMUM PLASTICITY INDEX	15
MAXIMUM PERCENT PASSING NO. 200 SIEVE	35
MINIMUM PERCENT PASSING 3/4" SIEVE	100

THE MATERIAL SHALL BE FREE FLOWING AND WHEN WET, SHALL NOT ADHERE TO FORM A BALL WHEN PRESSED IN THE HAND.

Ⓒ CEMENT STABILIZED SAND

NOTES:

1. *FOR BEDDING AND TRENCHING WITHIN ALL EXISTING PAVED AREAS SEE DETAILS FOR OPEN CUT STREETS (Details ST4-00, ST4-01, ST4-02). THIS NOTE DOES NOT APPLY TO STREETS BEING RECONSTRUCTED.*
2. *EVERY 100 FEET PROVIDE A WATER STOP BLOCK COMPOSED OF CEMENT SAND OR NATIVE MATERIALDEPENDING ON EMBEDMENT. BLOCK SHALL BE 6 FEET IN LENGTH. NO BEDDING SAND IN THIS AREA.*
3. ALL BEDDING & INSTALLATION OF PVC PIPE SHALL BE IN ACCORDANCE WITH ANSI/AWWA STANDARDS FOR PVC PIPE.
4. ALL BEDDING & INSTALLATION OF DUCTILE IRON PIPE SHALL BE IN ACCORDANCE WITH ANSI/AWWA C150/A21.50
5. COMPACTION SHALL BE ATTAINED BY MECHANICAL TAMPING.
6. RELATIVE COMPACTION SHALL BE TESTED IN THE PRESENCE OF THE CITY ENGINEER.
7. DUST RESULTING FROM THE CONTRACTOR'S PERFORMANCE OF THE WORK, EITHER INSIDE OR OUTSIDE THE RIGHT-OF-WAY, SHALL BE CONTROLLED BY THE CONTRACTOR.
8. ALL TRENCHES SHALL BE BACK FILLED AND TEMPORARY PAVING OR PLATING PLACED AT THE END OF EACH WORKING DAY.

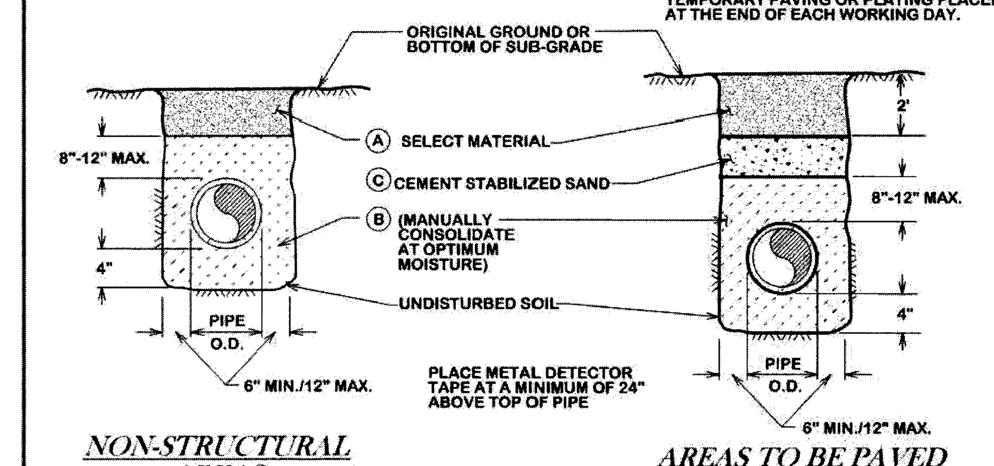

NON-STRUCTURAL AREAS

AREAS TO BE PAVED OR STREETS TO BE RECONSTRUCTED

CITY OF BRYAN | BEDDING AND TRENCH FOR DI PIPE & PVC PIPE WITHIN NON-STRUCTURAL OR NEW PAVED AREAS | DATE AUG. 2012 | B/CS UNIFIED STANDARD DETAIL | DETAIL NO. W4-02 | CITY OF COLLEGE STATION

NEW WATER SERVICE (SHORT AND LONG SIDE)

NOTES:

1. NO SPLICES IN COPPER TUBING WILL BE ALLOWED BETWEEN THE SERVICE SADDLE AND THE CURB STOP FOR SINGLE SERVICE OR BETWEEN THE SERVICE SADDLE AND THE WYE FOR DOUBLE SERVICE.
2. IT SHALL BE THE RESPONSIBILITY OF THE CONTRACTOR TO PRESSURE TEST LINE IMMEDIATELY AFTER THE STREET CROSSINGS HAVE BEEN INSTALLED.
3. MARK EACH SERVICE END WITH METAL "T" POST PAINTED BLUE.
4. MATERIAL USED SHALL BE AS SPECIFIED OR AN APPROVED EQUAL.
5. ALL CONNECTIONS TO BE COMPRESSION TYPE.
6. ALL SERVICE WYES & EXTENSIONS ARE TO BE INSTALLED WITH THE MAIN LINE CONSTRUCTION.
7. METERS AND VALVE BOXES SHALL BE PLACED BY THE CITY UPON PAYMENT OF FEE.
8. LOT CORNERS SHALL BE MARKED WITH A LATH UNDER THE SUPERVISION F A RPLS UPON COMPLETION OF CONSTRUCTION.

** SEE TECHNICAL SECTION 33 12 13 FOR MATERIAL REQUIREMENTS

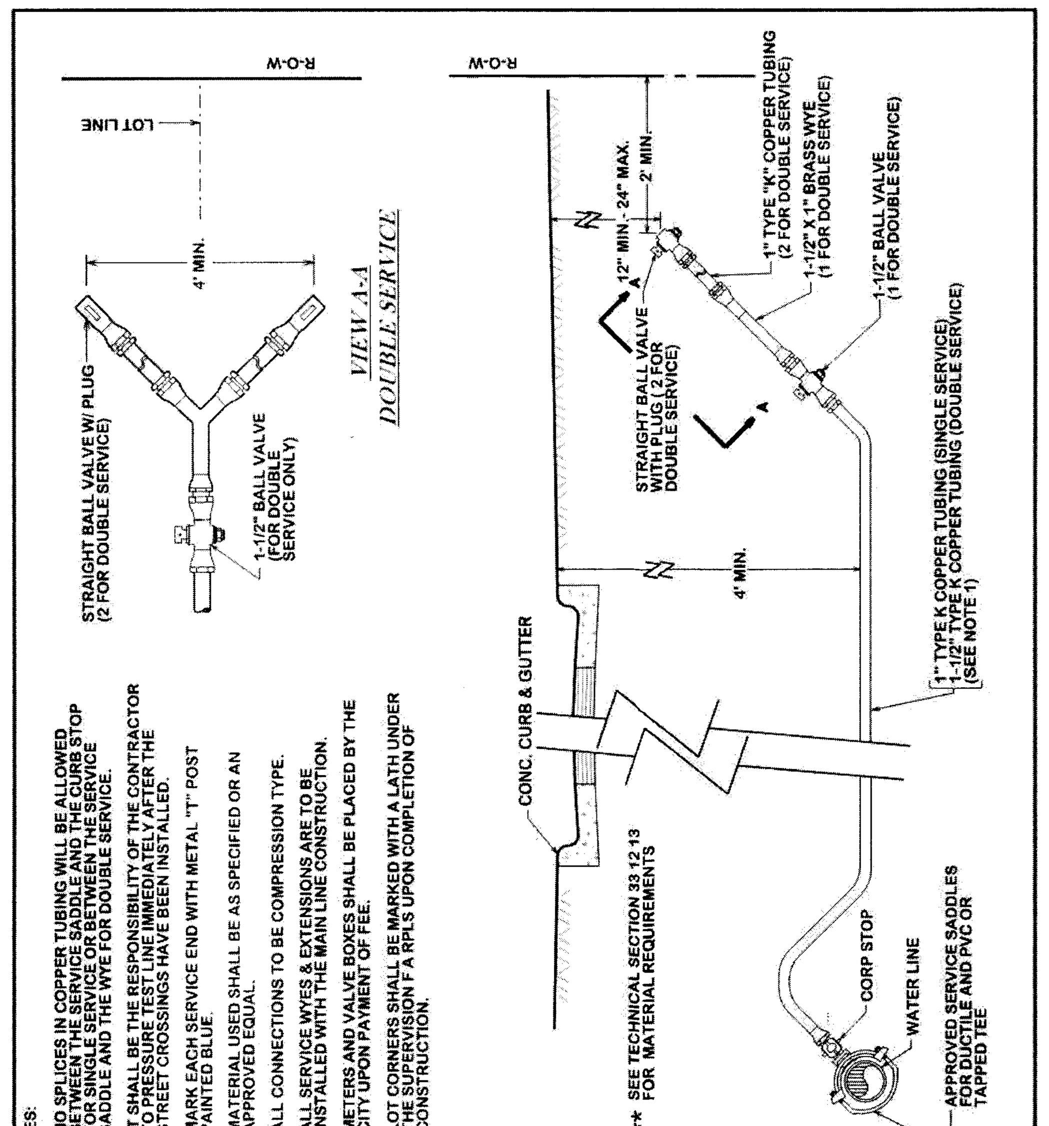

CITY OF BRYAN | NEW WATER SERVICE (SHORT AND LONG SIDE) | DATE JAN. 2009 | B/CS UNIFIED STANDARD DETAIL | DETAIL NO. W2-01 | CITY OF COLLEGE STATION

CITY OF BRYAN STRAIGHT OR ANGLE TAP - 1-1/2"

NOTES:

1. Service saddle, SS straps, CC threads Installed per manufacturer's recommendations. All main types: Smith Blair 317
2. Corporation Stop: Ford FB 1000-6-Q - 1-1/2"
3. Service tubing: Type K copper - soft - 1-1/2"
4. Ford male adapter - C84-66-Q - 1-1/2"
5. Meter box valve:
   5 = Ford Angle Stop - BA-11-666W - 1-1/2"
   5A = Ford Straight Stop - B11-666W - 1-1/2"
6. Brass all thread I.P.S. - 1-1/2"
7. Meter Flange - CF31-66 - 1-1/2"
8. Meter box and lid: Old Castle meter box, CI lid with Reader #65

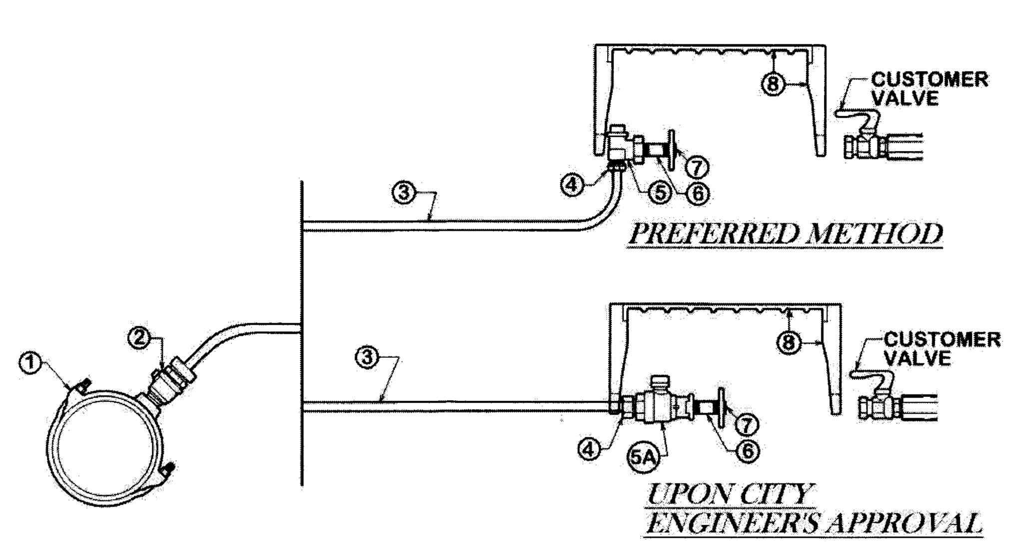

CITY OF BRYAN | CITY OF BRYAN STRAIGHT OR ANGLE TAP - 1-1/2" | DATE JULY 2016 | B/CS UNIFIED STANDARD DETAIL | DETAIL NO. W6-02 | CITY OF COLLEGE STATION

6 INCH WATER LINE & FIRE HYDRANT (PUBLIC)

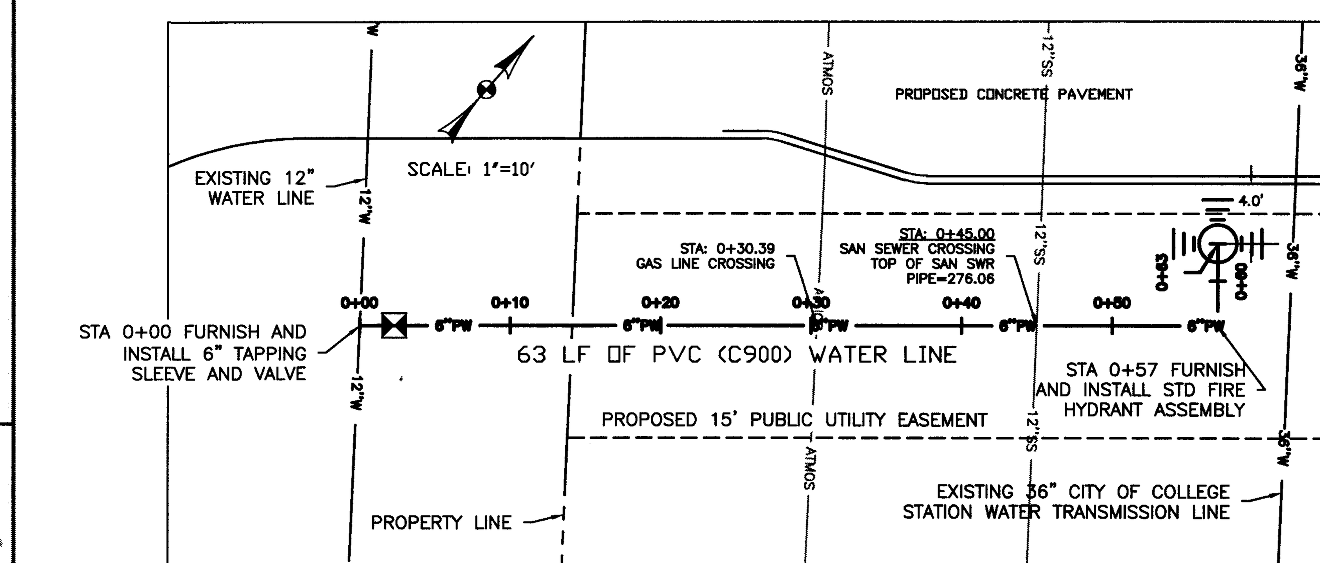

6 INCH WATER LINE & FIRE HYDRANT (PUBLIC)

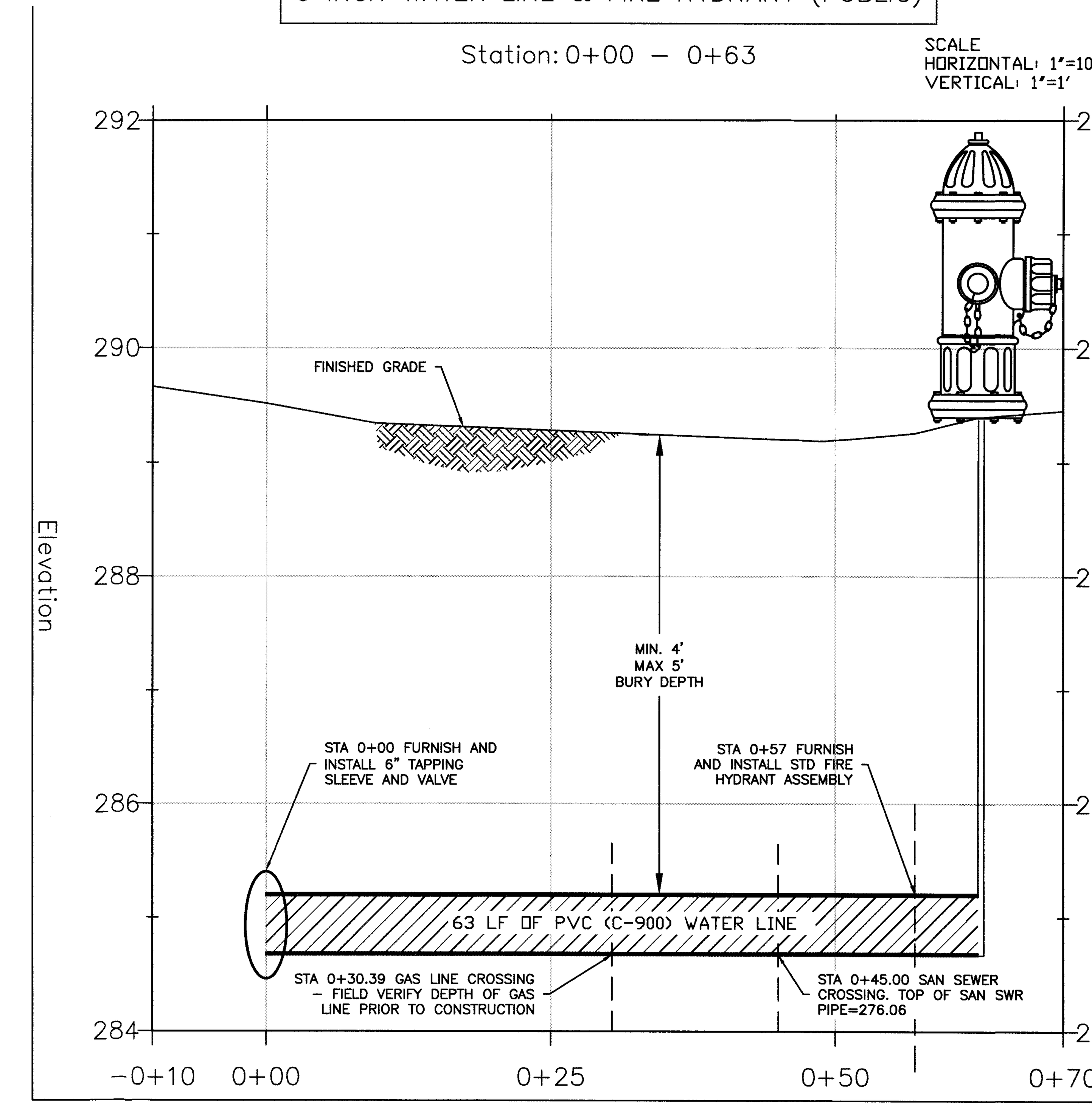

NOTES:

1. SEE B/CS STANDARD FIRE HYDRANT ASSEMBLY DETAIL FOR SPECIFICS CONSTRUCTION REQUIREMENTS.
2. TAPPING SLEEVE TO BE 6' SMITH BLAIR 665 SS TAPPING SLEEVE.
3. CONTRACTOR TO VERIFY THE LOCATIONS AND DEPTHS OF UTILITIES CROSSING PROPOSED LOCATION OF WATER LINE PRIOR TO CONSTRUCTION. IMMEDIATELY NOTIFY CIVIL ENGINEERING CONSULTANTS OF ANY CONFLICTS UPON DISCOVERY.

NOTES:

1. SEE B/CS STANDARD WATER DETAILS FOR GATE VALVE, BEDDING AND BACKFILL, AND THRUST BLOCKING DETAILS.

DESIGNED BY: SJH
DRAWN BY: SJH
APPROVED: AAP
JOB NO: E0559200

D O N   D U R D E N ,   I N C
d.b.a. CIVIL ENGINEERING CONSULTANTS
4101 S. TEXAS AVE, SUITE A
BRYAN, TEXAS 77802
TEL: (979) 846-6212
FAX: (979) 846-8252
REGISTRATION #F-2214
CEC
SAN ANTONIO / LAREDO
BRYAN / COLLEGE STATION

THIS DOCUMENT IS RELEASED UNDER THE AUTHORITY OF ALFRED A. PAINE, P.E. 97221 ON 9/7/2016 FOR THE PURPOSE OF INTERIM REVIEW. –NOT FOR CONSTRUCTION–

REV	DATE	DESCRIPTION

CAMPING MAXX

SHULMAN INDUSTRIAL PARK (34.19 ACRES)
PHASE ONE
WATERLINE PLAN/PROFILE
BRYAN, BRAZOS COUNTY, TEXAS

SHEET NO.
C6.2

K:\data\BCS\Proj_2016\E0559200_SHULMAN INDUSTRIAL PARK – FM 2818\cadd\Engineering\E0559200 – C6.1-6.2 Notes & Details.dwg – September 7, 2016