APPLE CREEK
CHANNEL IMPROVEMENTS
CIP NO. 425-D1-1414

CITY OF BRYAN
CITY COUNCIL

JASON BIENSKI	-	MAYOR
AL SAENZ	-	SINGLE MEMBER DISTRICT 1
RAFAEL PENA III	-	SINGLE MEMBER DISTRICT 2
GREG OWENS	-	SINGLE MEMBER DISTRICT 3
MIKE SOUTHERLAND	-	SINGLE MEMBER DISTRICT 4
ART HUGHES	-	SINGLE MEMBER DISTRICT 5
CHUCK KONDERLA	-	PLACE 6 - AT LARGE
PAUL KASPAR, P.E.	-	CITY ENGINEER
PATRICIA EDWARDS	-	PROJECT MANAGER

CITY OF BRYAN
The Good Life, Texas Style.™

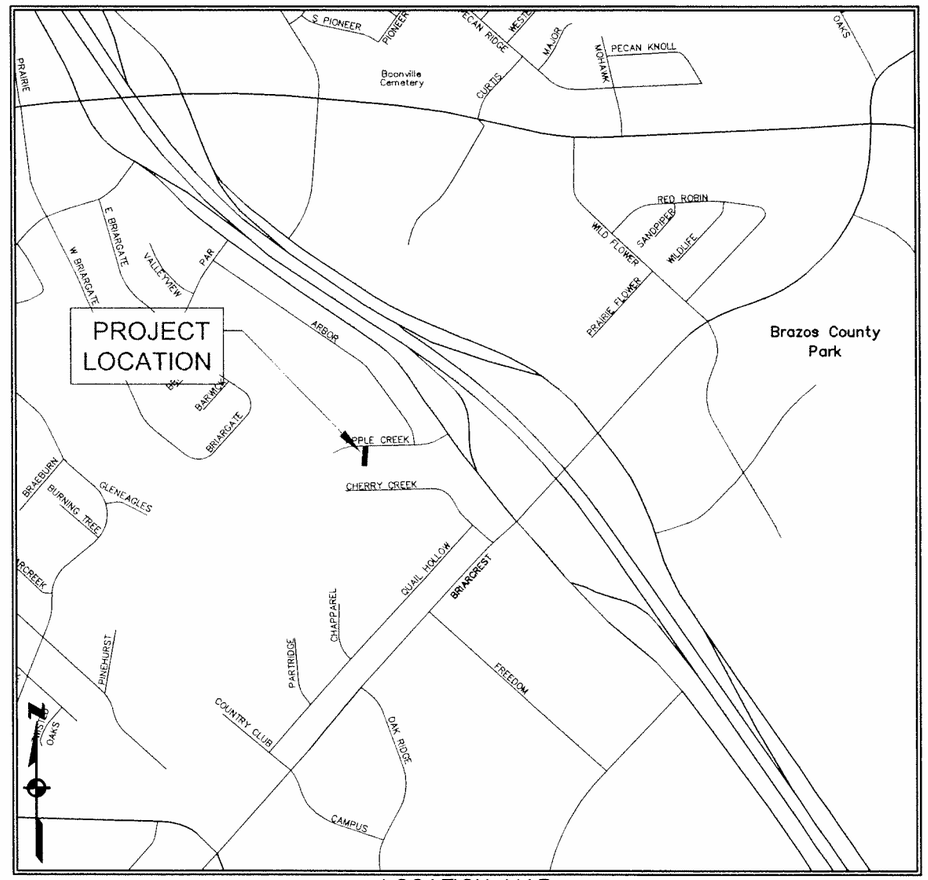

LOCATION MAP
N.T.S.

AUGUST 2015

DRAWING INDEX

SHEET	DESCRIPTION
1	TITLE PAGE
2	DEMOLITION PLAN
3	OPEN CHANNEL PLAN & PROFILE
4	CHANNEL PROFILE CROSS-SECTIONS
5	GABION & SPILL WAY INSTALLATION
6	GRADING PLAN
7	CHANNEL DETAILS
8	TYPICAL DETAILS

STATE OF TEXAS
W. PAUL KASPAR
86293
LICENSED
PROFESSIONAL ENGINEER

W. Paul Kaspar
9/11/2015

This seal appearing on this document was authorized by W.Paul Kaspar P.E., 86293. Alteration of a sealed document without proper notification to the responsible engineer is an offense under the Texas Engineering Practice Act. This document is released for bidding purposes on August 31, 2015.

APPLE CREEK CHANNEL IMPROVEMENTS TITLE PAGE	
DRAWN BY:	PSE
DATE:	08-2015
APPR BY:	WPK
SCALE:	
PROJECT NO: 425-D1-1414	

REV.	DATE	DESCRIPTION

SHEET 1 OF 8

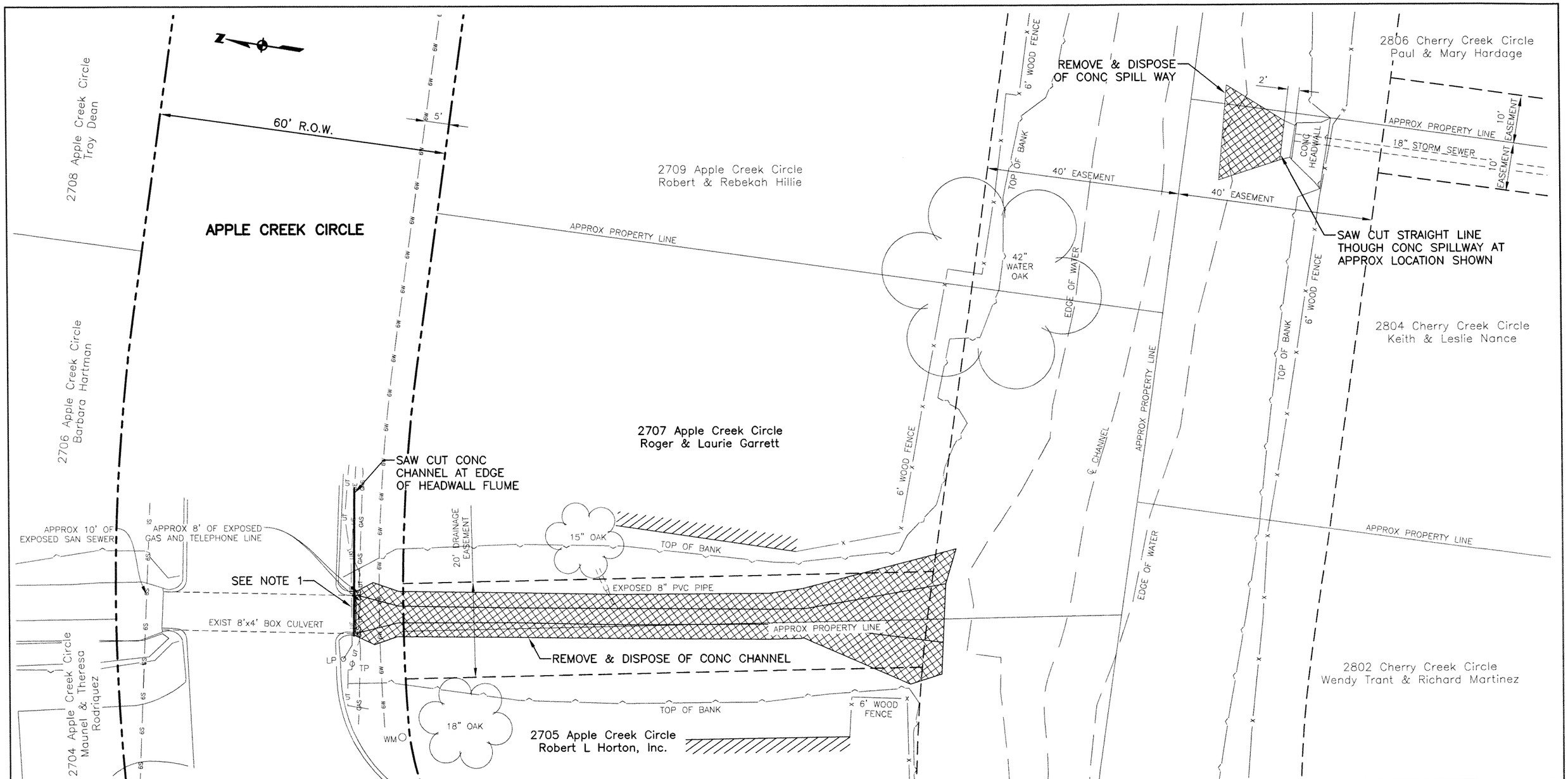

LEGEND:

- 6W — EXIST 6" WATER LINE
- 6S — EXIST 6" SAN SEWER
- UE — EXIST UNDERGROUND ELECTRIC
- UT — EXIST UNDERGROUND TELEPHONE
- GAS — EXIST GAS LINE

NOTES:

1. CONTRACTOR TO COORDINATE WITH PRIVATE UTILITIES TO HAVE EXISTING EXPOSED FACILITIES RELOCATED A MINIMUM OF 2' BELOW PROPOSED CHANNEL.
2. CONTRACTOR TO HIRE AN ARBORIST TO DIRECT EXCAVATION AND PROVIDE TREE PROTECTION SO THAT TREES WITHIN THE EXCAVATION AREA ARE NOT DAMAGED. ALL TREES 6" DIA AND LARGER WITHIN THE AREA OF EXCAVATION ARE TO BE PROTECTED.

STATE OF TEXAS
W. PAUL KASPAR
86293
LICENSED
PROFESSIONAL ENGINEER
9/1/2015

CITY OF BRYAN

This seal appearing on this document was authorized by W. Paul Kaspar, P.E., 86293. Alteration of a sealed document without proper notification to the responsible engineer is an offense under the Texas Engineering Practice Act. This document is released for bidding purposes on August 31, 2015.

APPLE CREEK CHANNEL IMPROVEMENTS DEMOLITION PLAN	
DRAWN BY:	PSE
DATE:	08-2015
APPR BY:	WPK
SCALE:	1"=20'H
PROJECT NO: 425-D1-1414	

REV.	DATE	DESCRIPTION

SHEET 2 OF 8

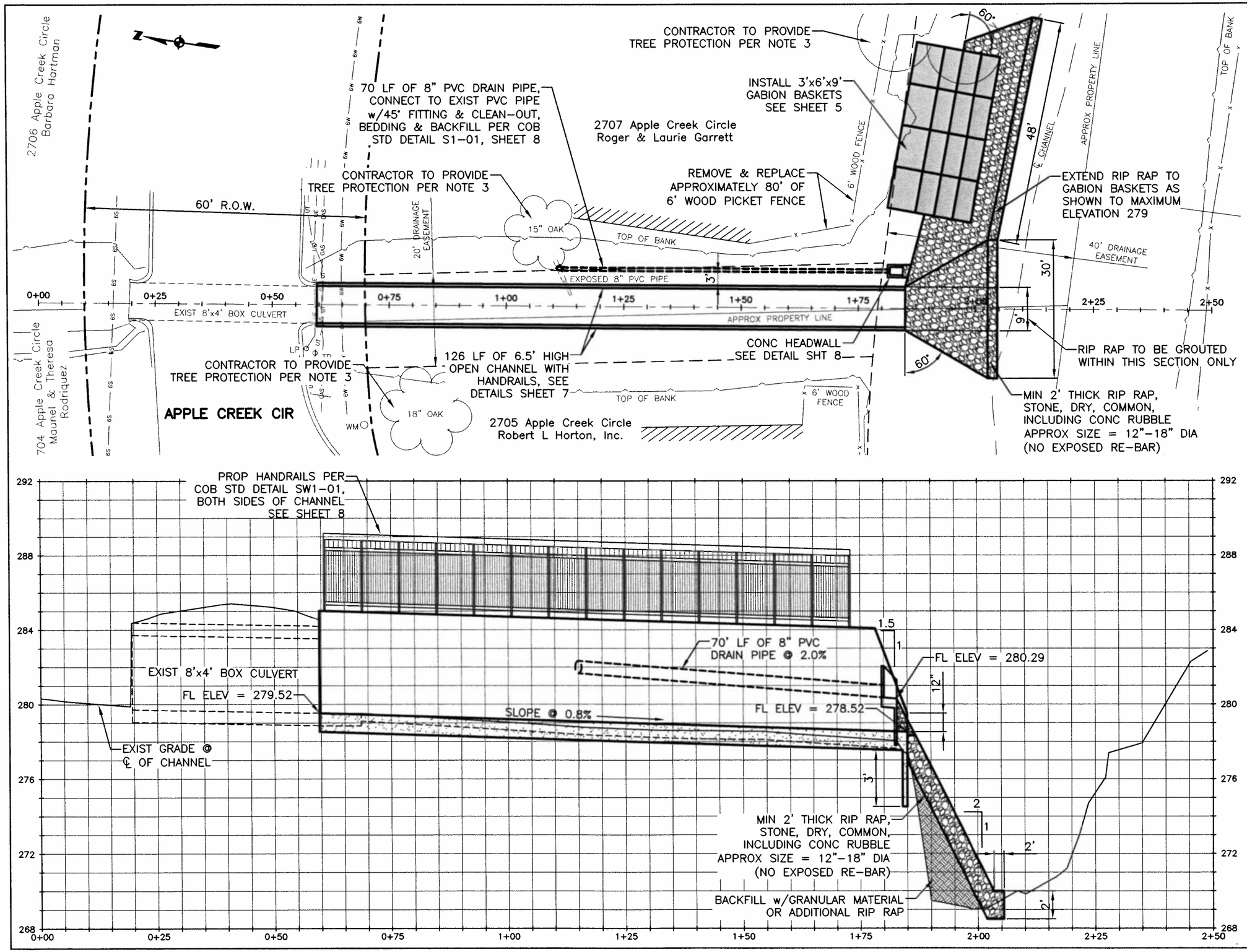

NOTES:

1. CONTRACTOR TO PROVIDE AND INSTALL SODDING ON ALL DISTURBED AREAS, ELEVATION 283 AND GREATER.
2. CONTRACTOR TO PROVIDE SEEDING AND EROSION CONTROL MAT, CURLEX II (.98) AS MANUFACTURED BY AMERICAN EXCELSIOR COMPANY (OR APPROVED EQUAL) ON ALL DISTURBED AREAS BELOW ELEVATION 283. EROSION CONTROL MAT SHALL BE RATED FOR A VELOCITY OF 9.2 CFS OR GREATER AND A FUNCTIONAL LONGEVITY OF LESS THAN OR EQUAL TO 30 MONTHS. MAT SHALL BE INSTALLED IN STRICT CONFORMANCE TO MANUFACTURER'S INSTRUCTIONS.
3. CONTRACTOR TO HIRE AN ARBORIST TO DIRECT EXCAVATION AND PROVIDE TREE PROTECTION SO THAT TREES WITHIN THE EXCAVATION AREA ARE NOT DAMAGED. ALL TREES 6" DIA AND LARGER WITHIN THE AREA OF EXCAVATION ARE TO BE PROTECTED.
4. SEE SHEET 6 FOR GRADING PLAN.

STATE OF TEXAS
W. PAUL KASPAR
86293
LICENSED
PROFESSIONAL ENGINEER
9/1/20

CITY OF BRYAN

This seal appearing on this document was authorized by W. Paul Kaspar, P.E., 86293. Alteration of a sealed document without proper notification to the responsible engineer is an offense under the Texas Engineering Practice Act. This document is released for bidding purposes on August 31, 2015.

APPLE CREEK CHANNEL IMPROVEMENTS OPEN CHANNEL PLAN & PROFILE	
DRAWN BY:	PSE
DATE:	08-2015
APPR BY:	WPK
SCALE:	1"=20'H 1"=5'V
PROJECT NO: 425-D1-1414	

REV.	DATE	DESCRIPTION	SHEET
			3 OF 8

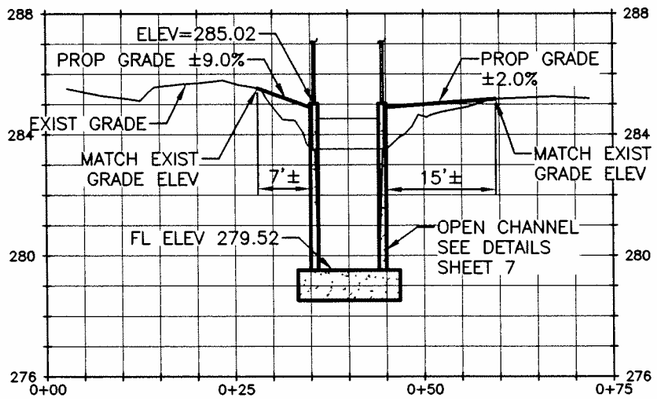

CROSS-SECTION @ STA 0+60

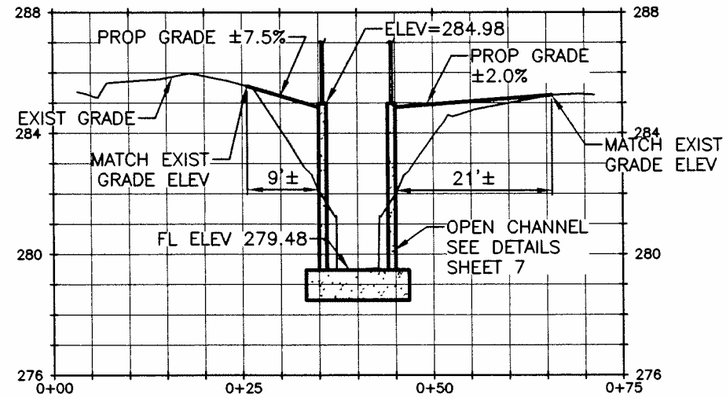

CROSS-SECTION @ STA 0+65

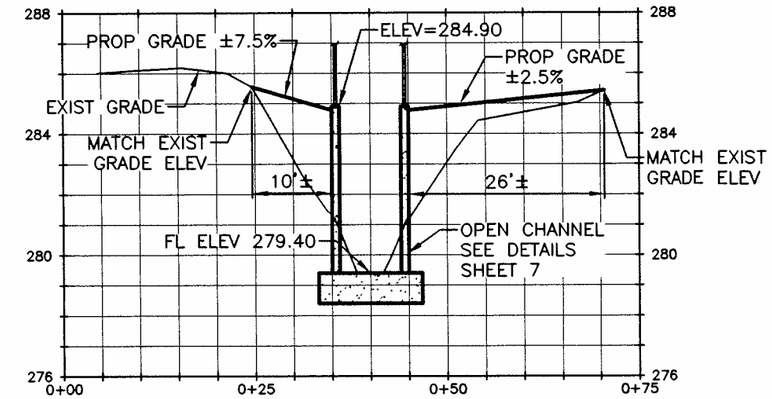

CROSS-SECTION @ STA 0+75

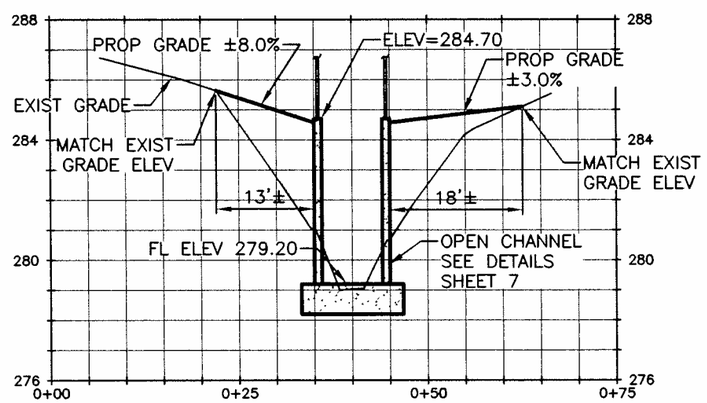

CROSS-SECTION @ STA 1+00

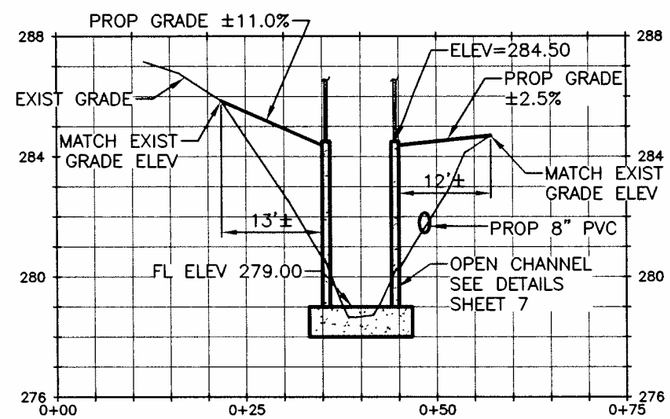

CROSS-SECTION @ STA 1+25

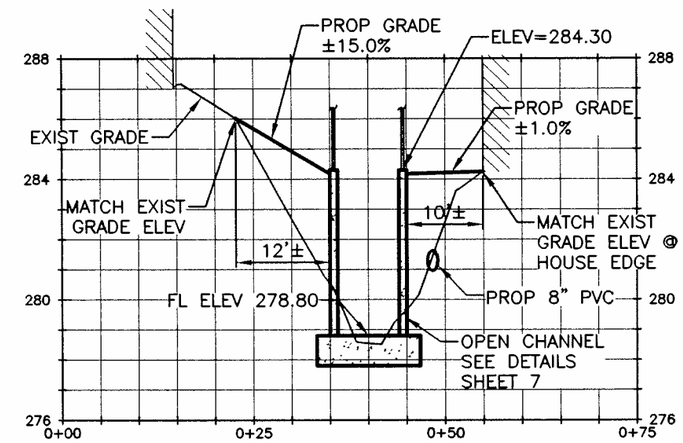

CROSS-SECTION @ STA 1+50

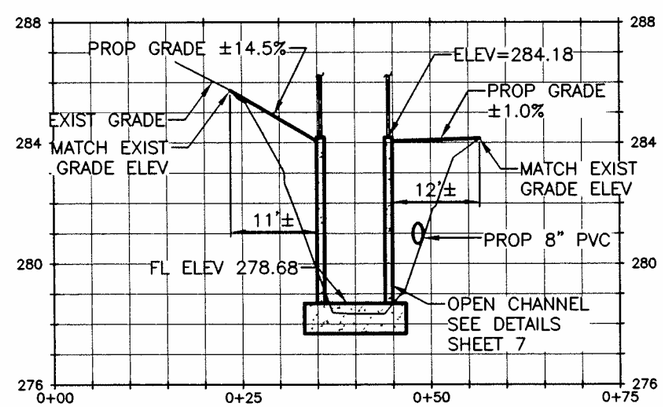

CROSS-SECTION @ STA 1+65

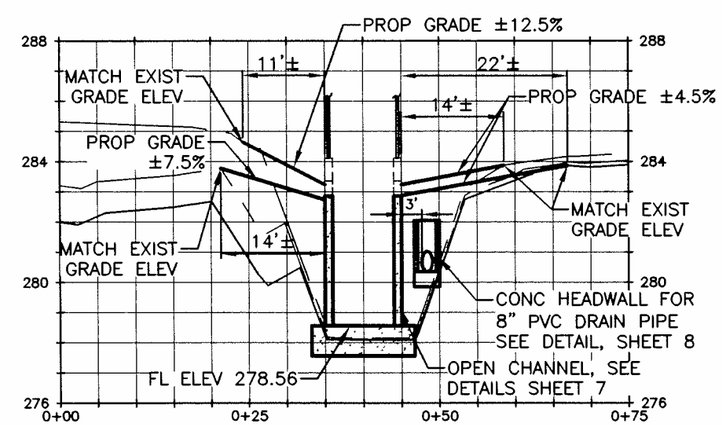

CROSS-SECTION @ STA 1+80

NOTES:

1. PROVIDE CHANNEL BEDDING & BACKFILL IN ACCORDANCE WITH DETAIL ON SHEET 8.

9/1/15

STATE OF TEXAS
W. PAUL KASPAR
86293
LICENSED
PROFESSIONAL ENGINEER

W. Paul Kaspar

CITY OF BRYAN

This seal appearing on this document was authorized by W. Paul Kaspar, P.E., 86293. Alteration of a sealed document without proper notification to the responsible engineer is an offense under the Texas Engineering Practice Act. This document is released for bidding purposes on August 31, 2015.

APPLE CREEK CHANNEL IMPROVEMENTS CULVERT PROFILE CROSS-SECTIONS	
DRAWN BY:	PSE
DATE:	08-2015
APPR BY:	WPK
SCALE:	1"=20'H 1"=5'V
PROJECT NO:	425-D1-1414

REV.	DATE	DESCRIPTION

SHEET 4 OF 8

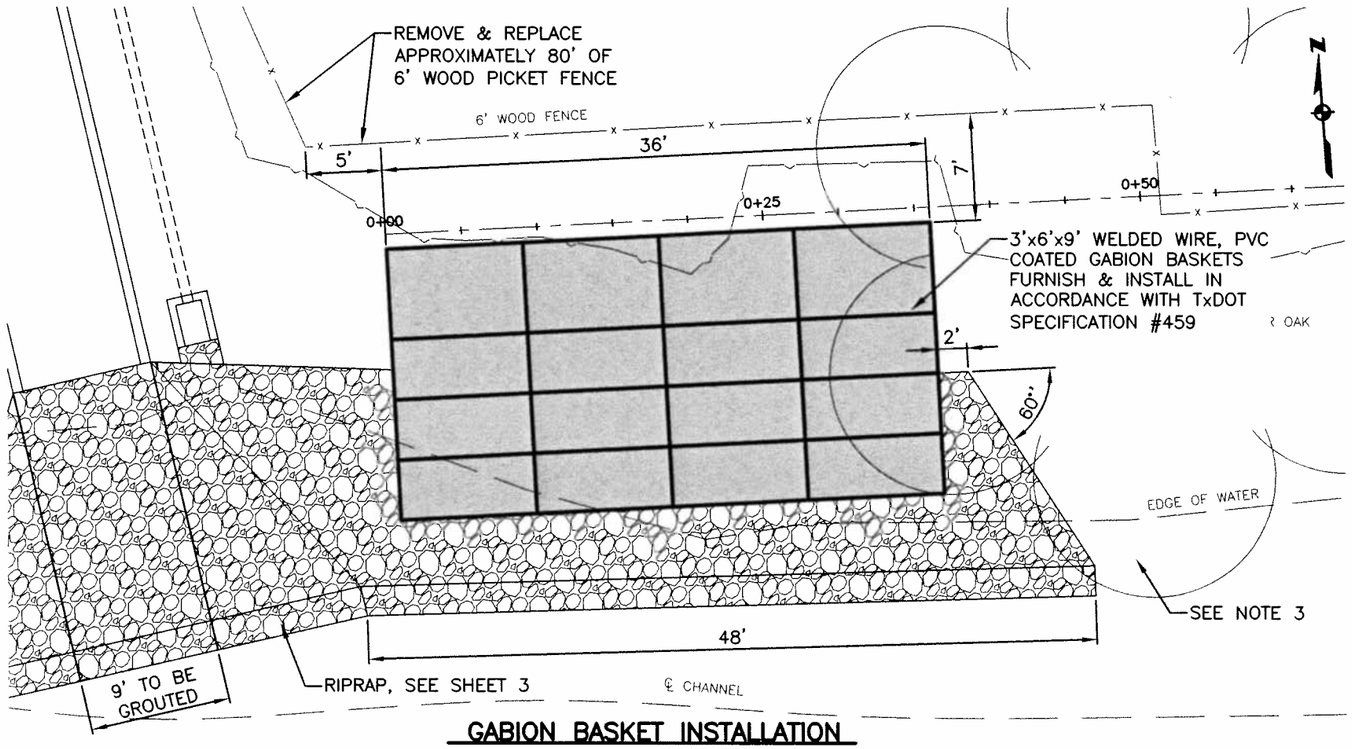

GABION BASKET INSTALLATION

NOTES:

1. RIP RAP TO BE STONE, DRY, COMMON, INCLUDING CONC RUBBLE APPROX SIZE = 12" –18" DIA (NO EXPOSED RE–BAR).
2. SEE GRADING PLAN (SHEET 6) FOR SODDING, SEEDING AND FINAL EROSION STABILIZATION.
3. CONTRACTOR TO HIRE AN ARBORIST TO DIRECT EXCAVATION AND PROVIDE TREE PROTECTION SO THAT TREES WITHIN THE EXCAVATION AREA ARE NOT DAMAGED. ALL TREES 6" DIA AND LARGER WITHIN THE AREA OF EXCAVATION ARE TO BE PROTECTED.
4. PROVIDE SLOPE SAFETY IN ACCORDANCE WITH OSHA. BACKFILL MATERIAL TO BE SELECT MATERIAL: EXCAVATED MATERIAL, WHICH IS FREE OF ROCKS, LUMPS, CLODS OR DEBRIS LARGER THAN TWO (2) INCHES IN THE LARGEST DIMENSION, COMPACTED TO A MINIMUM OF 98% OF MAXIMUM DENSITY AS DETERMINED BY ASTM D698 AT A MOISTURE CONTENT WITHIN OPTIMUM TO +4% OPTIMUM.

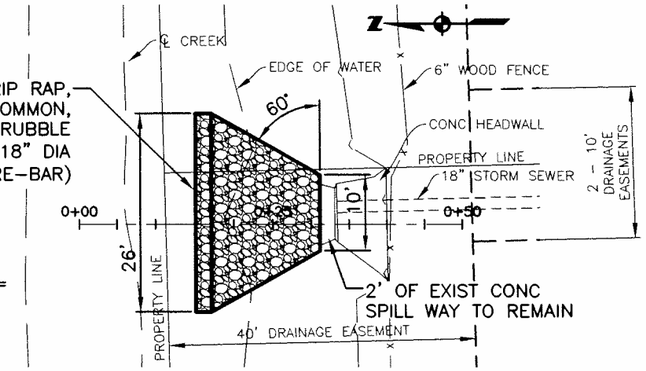

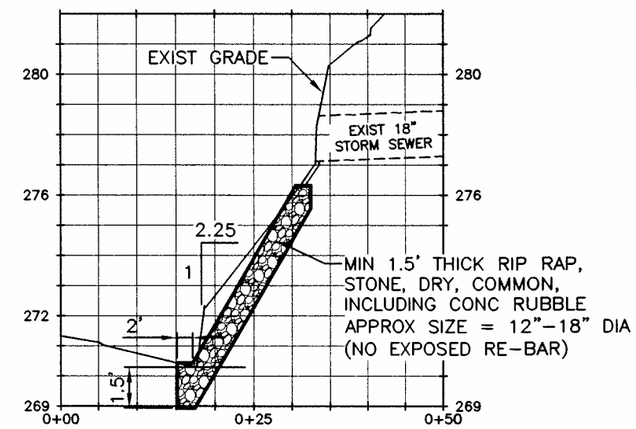

SPILL WAY INSTALLATION

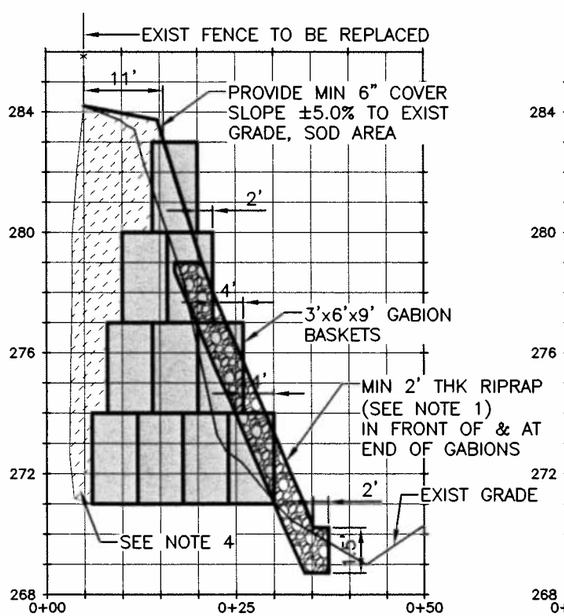

CROSS–SECTION @ STA 0+00

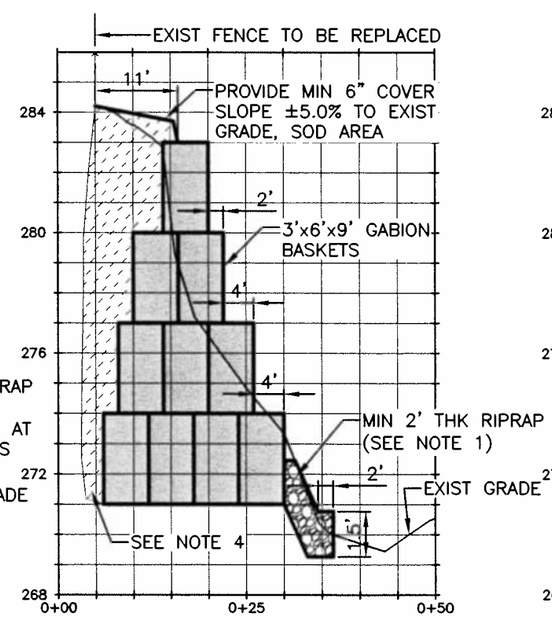

CROSS–SECTION @ STA 0+18

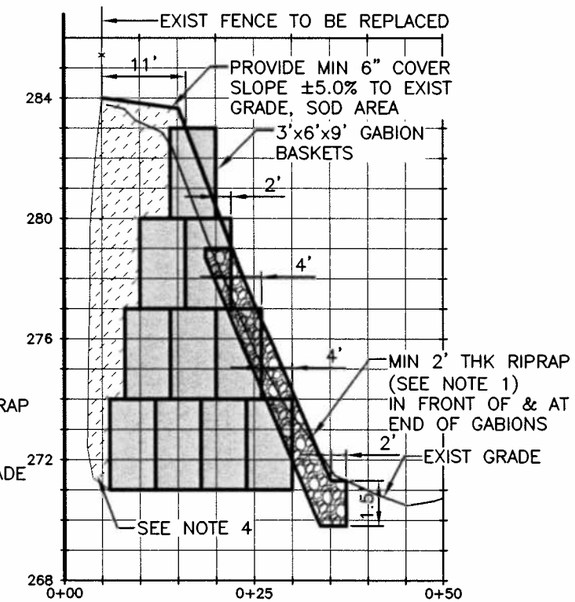

CROSS–SECTION @ STA 0+36

STATE OF TEXAS
W. PAUL KASPAR
86293
LICENSED
PROFESSIONAL ENGINEER

9/1/15 W. Paul Kaspar

CITY OF BRYAN

This seal appearing on this document was authorized by W. Paul Kaspar, P.E., 86293. Alteration of a sealed document without proper notification to the responsible engineer is an offense under the Texas Engineering Practice Act. This document is released for bidding purposes on August 31, 2015.

APPLE CREEK CHANNEL IMPROVEMENTS GABION & SPILL WAY INSTALLATION	
DRAWN BY:	PSE
DATE:	08–2015
APPR BY:	WPK
SCALE:	1"=20'H 1"=5'V
PROJECT NO: 425–D1–1414	

REV.	DATE	DESCRIPTION

SHEET 5 OF 8

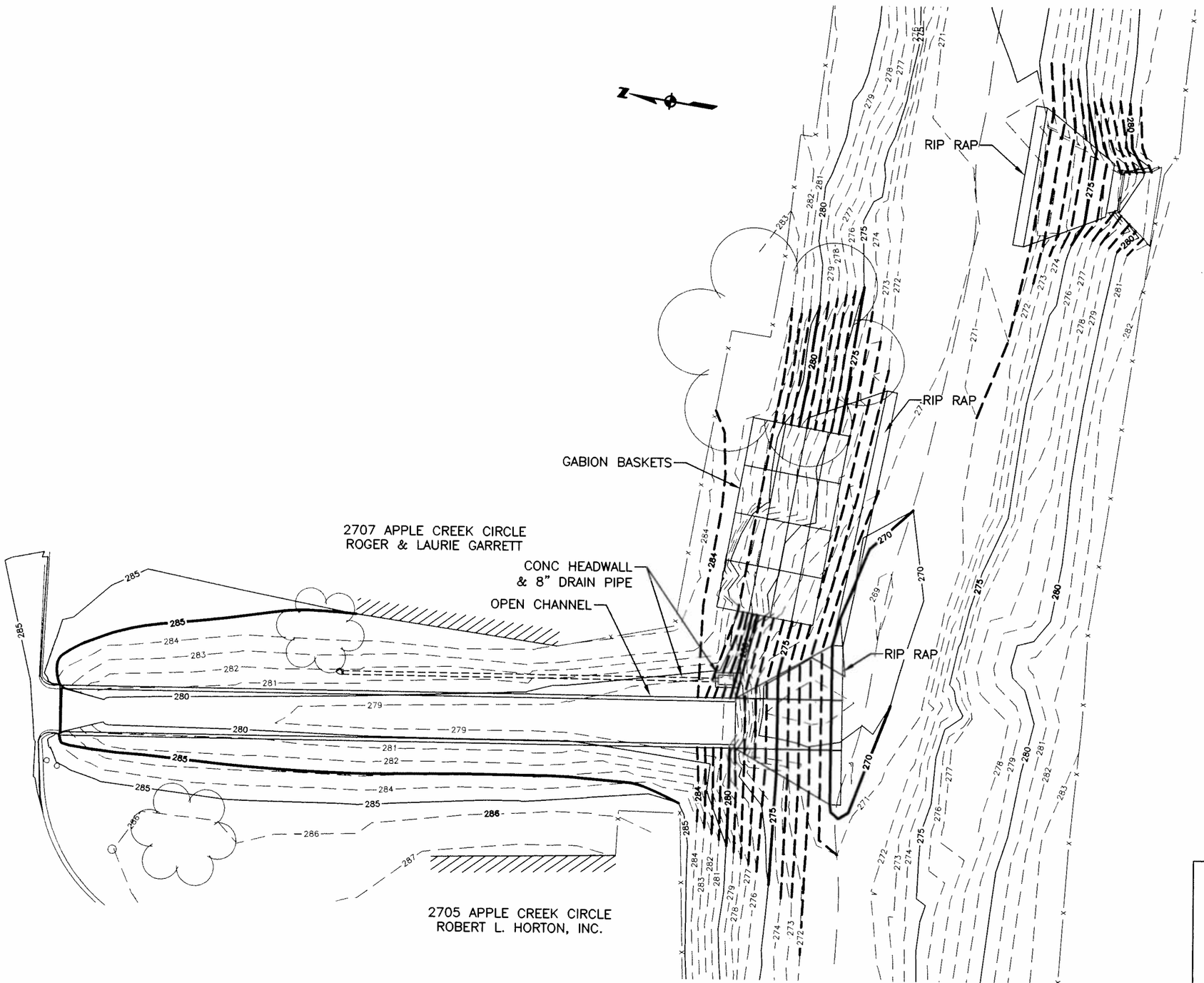

LEGEND:

- EXIST MAJOR CONTOUR
- EXIST MINOR CONTOUR
- EXIST ℄ CREEK
- PROP MAJOR CONTOUR
- PROP MINOR CONTOUR

NOTES:

1. CONTRACTOR TO PROVIDE AND INSTALL SODDING ON ALL DISTURBED AREAS, ELEVATION 283 AND GREATER.
2. CONTRACTOR TO PROVIDE SEEDING AND EROSION CONTROL MAT, CURLEX II (.98) AS MANUFACTURED BY AMERICAN EXCELSIOR COMPANY (OR APPROVED EQUAL) ON ALL DISTURBED AREAS BELOW ELEVATION 283. EROSION CONTROL MAT SHALL BE RATED FOR A VELOCITY OF 9.2 CFS OR GREATER AND A FUNCTIONAL LONGEVITY OF LESS THAN OR EQUAL TO 30 MONTHS. MAT SHALL BE INSTALLED IN STRICT CONFORMANCE TO MANUFACTURER'S INSTRUCTIONS.
3. CONTRACTOR TO HIRE AN ARBORIST TO DIRECT EXCAVATION AND PROVIDE TREE PROTECTION SO THAT TREES WITHIN THE EXCAVATION AREA ARE NOT DAMAGED. ALL TREES 6" DIA AND LARGER WITHIN THE AREA OF EXCAVATION ARE TO BE PROTECTED.

AMENDMENT NO. 1

STATE OF TEXAS
W. PAUL KASPAR
86293
LICENSED
PROFESSIONAL ENGINEER
9/15/15

CITY OF BRYAN

This seal appearing on this document was authorized by W. Paul Kaspar, P.E., 86293. Alteration of a sealed document without proper notification to the responsible engineer is an offense under the Texas Engineering Practice Act. This document is released for bidding purposes on August 31, 2015.

APPLE CREEK CHANNEL IMPROVEMENTS
GRADING PLAN

DRAWN BY:	PSE
DATE:	08-2015
APPR BY:	WPK
SCALE:	1"=20'H
PROJECT NO:	425-D1-1414

REV.	DATE	DESCRIPTION
1	9/15/15	Rev Exist Contours

SHEET 6 OF 8

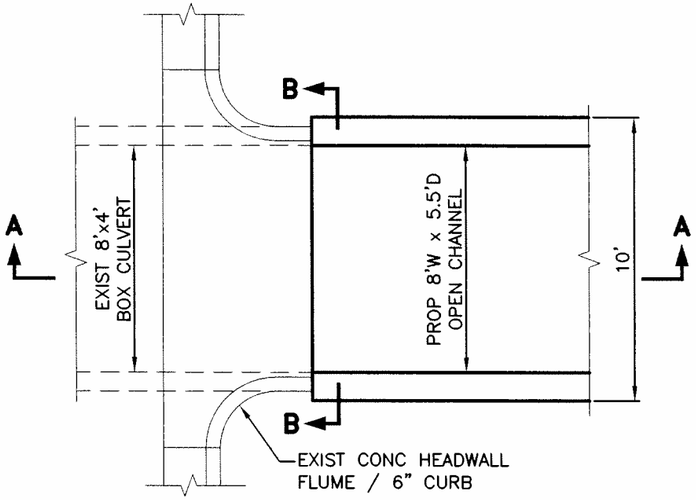

NOTES:

1. THE CAST-IN-PLACE CONCRETE CHANNEL SHALL BE FLUSH WITH THE INSIDE FACES OF THE EXISTING BOX CULVERT.
2. PROVIDE AN 8" MINIMUM PENETRATION OF #4 DOWELS INTO CHANNEL AND EXISTING STRUCTURE. DRILL OPENING INTO EXISTING STRUCTURE AND INSTALL DOWELS USING SIMPSON STRONG-TIE HIGH STRENGTH ANCHORING ADHESIVE SET (OR APPROVED EQUAL WITH APPROVAL OF CITY ENGINEER).
3. STRUCTURE CONCRETE SHALL CONFORM TO STANDARD SPECIFICATION 03 30 00 (CONCRETE) FOR STRUCTURES
4. ALL REINFORCING STEEL TO BE GRADE 60.
5. ALL CONCRETE TO BE 4,000 PSI @ 28 DAY IN ACCORDANCE WITH SPECIFICATION 03 30 00.

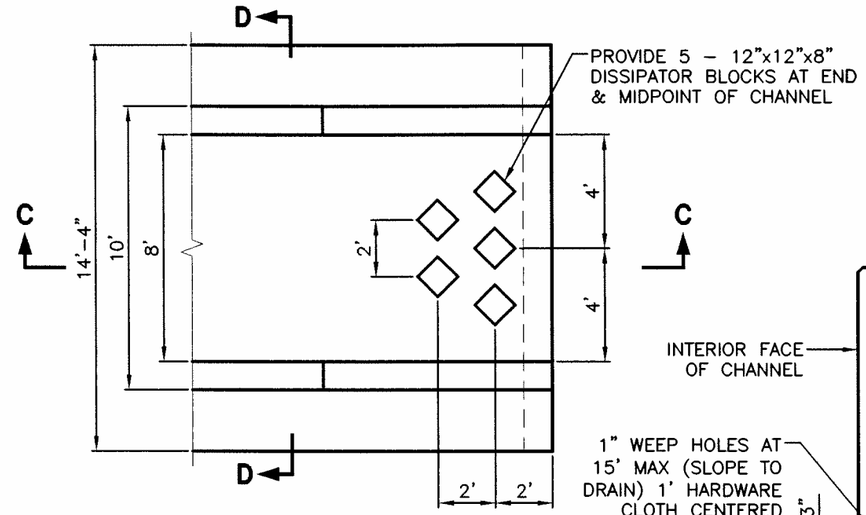

CHANNEL END DETAIL
HANDRAILS ARE NOT SHOWN

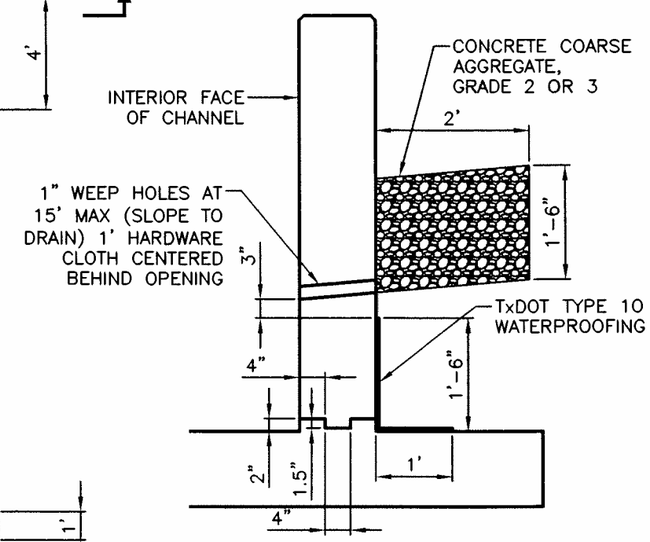

JOINT DETAIL

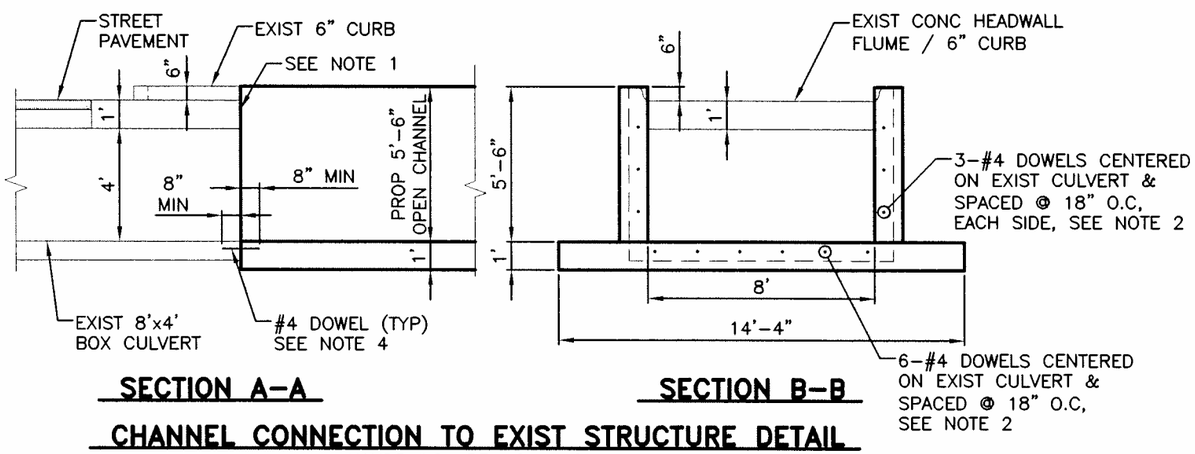

SECTION A-A **SECTION B-B**

CHANNEL CONNECTION TO EXIST STRUCTURE DETAIL
HANDRAILS ARE NOT SHOWN

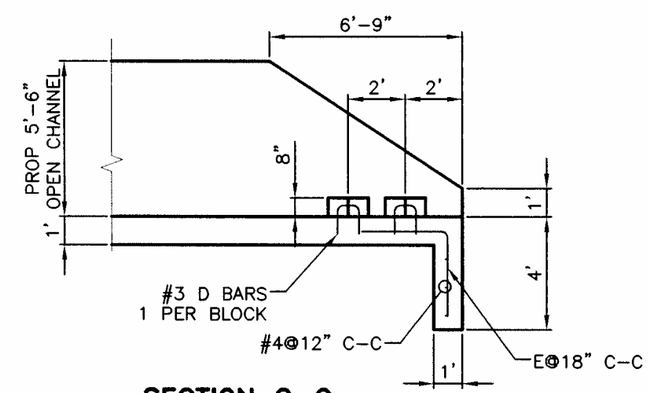

SECTION C-C

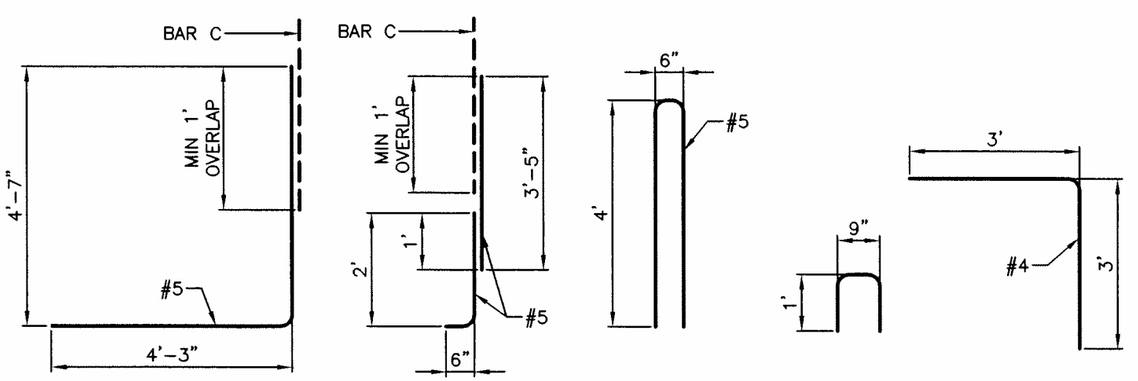

BARS A **BARS B** **BARS C** **BARS D** **BARS E**

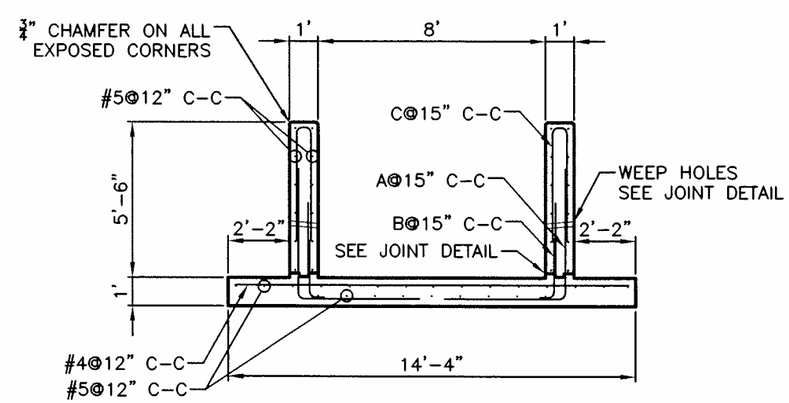

SECTION D-D
HANDRAILS ARE NOT SHOWN

STATE OF TEXAS
W. PAUL KASPAR
86293
LICENSED PROFESSIONAL ENGINEER

9/1/15

W. Paul Kaspar

CITY OF BRYAN

This seal appearing on this document was authorized by W. Paul Kaspar, P.E., 86293. Alteration of a sealed document without proper notification to the responsible engineer is an offense under the Texas Engineering Practice Act. This document is released for bidding purposes on _____

APPLE CREEK CHANNEL IMPROVEMENTS CHANNEL DETAILS	
DRAWN BY:	PSE
DATE:	08-2015
APPR BY:	WPK
SCALE:	3/16" = 1'-0"
PROJECT NO: 425-D1-1414	

REV.	DATE	DESCRIPTION	SHEET
			7 OF 8

NOTES:

1. *FOR BEDDING AND TRENCHING WITHIN ALL EXISTING PAVED AREAS, SEE DETAILS FOR OPEN CUT STREETS. (Details ST4-00, ST4-01, ST4-02). THIS NOTE DOES NOT APPLY TO STREETS BEING RECONSTRUCTED.*
2. ALL BEDDING & INSTALLATION OF PVC PIPE SHALL BE IN ACCORDANCE TO ANSI/AWWA STANDARDS FOR PVC PIPE.
3. ALL BEDDING & INSTALLATION OF DUCTILE IRON PIPE SHALL BE IN ACCORDANCE TO ANSI/AWWA C150/A21.50.
4. COMPACTION SHALL BE ATTAINED BY MECHANICAL TAMPING.
5. ALL TRENCHES SHALL BE BACK FILLED AND TEMPORARY PAVING OR PLANKING PLACED AT THE END OF EACH WORKING DAY.

Ⓐ SELECT NATIVE MATERIAL
MATERIAL EXCAVATED FROM THE DITCH, (WHICH IS FREE OF ROCKS, LUMPS, CLODS, OR DEBRIS LARGER THAN TWO (2) INCHES IN THE LARGEST DIMENSION), COMPACTED TO A MINIMUM OF 90% OF MAXIMUM DENSITY AS DETERMINED BY ASTM D698 (STANDARD) AT A MOISTURE CONTENT WITHIN OPTIMUM TO +4% OF OPTIMUM UNDER NON-STRUCTURAL AREAS (ie...YARDS, PASTURES, EASEMENTS) AND TO A MINIMUM OF 98% OF MAXIMUM DENSITY AS DETERMINED BY ASTM D698 (STANDARD) AT A MOISTURE CONTENT WITHIN OPTIMUM TO +4% OF OPTIMUM UNDER NEW STREET AREAS AND STREETS TO BE RECONSTRUCTED.

Ⓑ GRANULAR MATERIAL
MATERIAL SHALL BE BANK RUN RIVER SAND WHICH IS FREE OF DETRIMENTAL QUANTITIES OF CLAY, DEBRIS, OR ORGANIC MATERIAL AND WHICH, WHEN TESTED BY STANDARD LABORATORY METHODS, MEET THE FOLLOWING REQUIREMENTS:

MAXIMUM LIQUID LIMIT	45
MAXIMUM PLASTICITY INDEX	15
MAXIMUM PERCENT PASSING NO. 200 SIEVE	35
MINIMUM PERCENT PASSING 3/4" SIEVE	100

THE MATERIAL SHALL BE FREE FLOWING AND WHEN WET, SHALL NOT ADHERE TO FORM A BALL WHEN PRESSED IN THE HAND.

Ⓒ CEMENT STABILIZED SAND

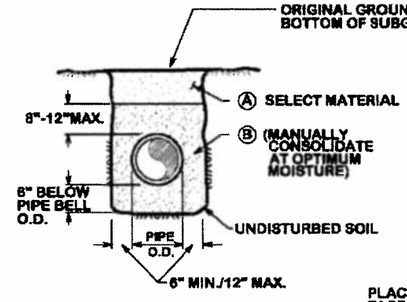

NON-STRUCTURAL AREAS

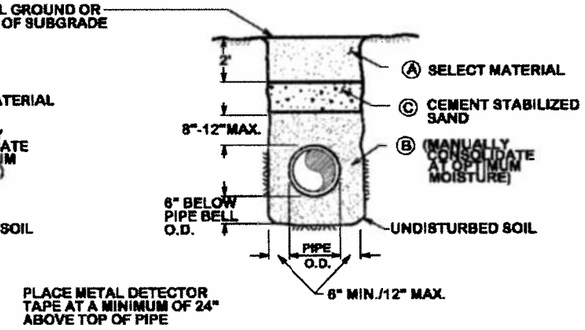

AREAS TO BE PAVED OR STREETS TO BE RECONSTRUCTED

BEDDING AND TRENCH FOR DI PIPE & PVC PIPE

S1-01

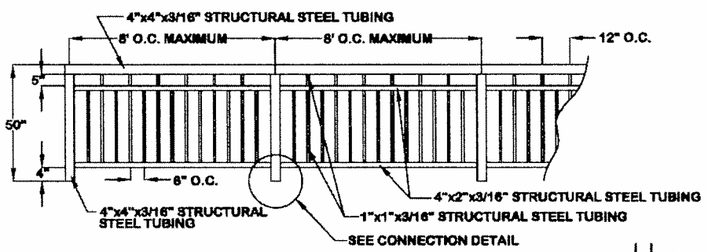

TYPICAL PEDESTRIAN GUARDRAIL

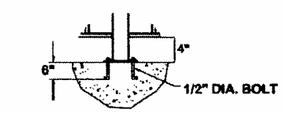

CONNECTION DETAIL

SW1-01

NOTES:

1. PEDESTRIAN GUARDRAILS TO BE PAINTED BLACK.
2. CONTRACTOR TO SUBMIT SHOP DRAWINGS OF PEDESTRIAN GUARDRAIL INSTALLATION AND/OR PRE-FABRICATION DETAILS.

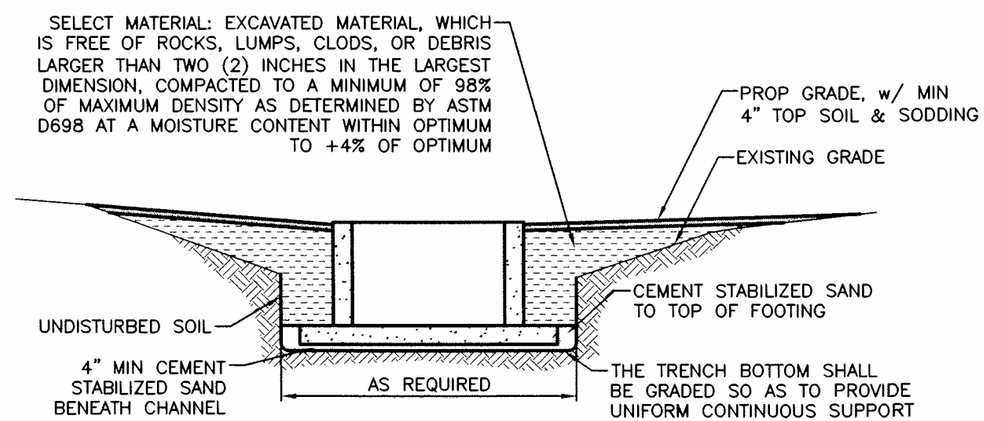

CHANNEL BEDDING & TRENCH DETAIL

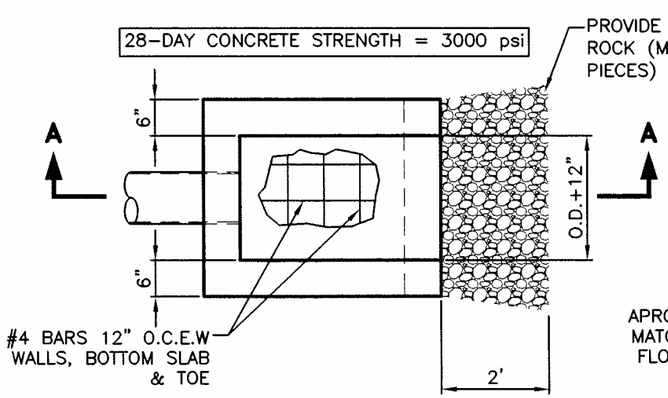

PLAN

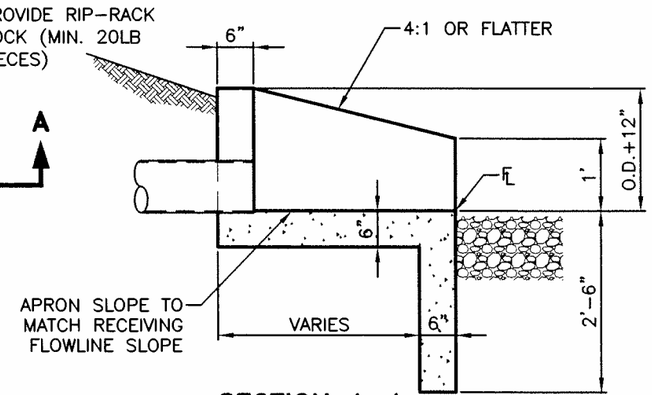

SECTION A-A

CONCRETE HEADWALL & END WALL WITH STRAIGHT WINGS

STATE OF TEXAS
W. PAUL KASPAR
86293
LICENSED
PROFESSIONAL ENGINEER

9/1/15 W. Paul Kaspar

CITY OF BRYAN

This seal appearing on this document was authorized by W. Paul Kaspar, P.E., 86293. Alteration of a sealed document without proper notification to the responsible engineer is an offense under the Texas Engineering Practice Act. This document is released for bidding purposes on August 31, 2015.

APPLE CREEK CHANNEL IMPROVEMENTS TYPICAL DETAILS	
DRAWN BY:	PSE
DATE:	07-2015
APPR BY:	WPK
SCALE:	NONE
PROJECT NO: 425-D1-1414	

REV.	DATE	DESCRIPTION

SHEET 8 OF 8