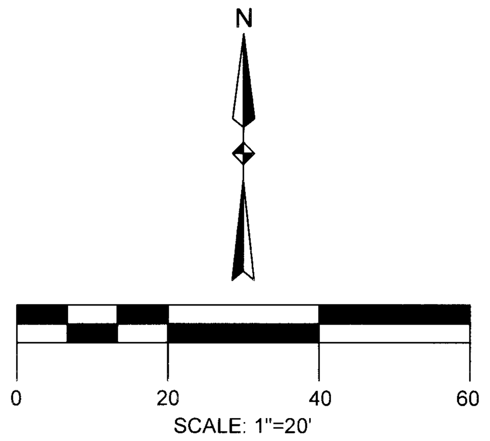

CAUTION: CONTACT THE TEXAS EXCAVATION SAFETY SYSTEM (DIG-TESS) AT 1-800-344-8377 TO LOCATE EXISTING UTILITIES PRIOR TO CONSTRUCTION. CONTACT GESSNER ENGINEERING IF CONFLICTS OCCUR.

BUILDING DATA SUMMARY			
EXISTING USE:	BANK/ LANDSCAPE ISLAND		
PROPOSED USE:	ATM WITH DRIVE THRU LANE		
NO. OF STORIES:	1		
PROPOSED	TOTAL SF	HEIGHT (FT)	TYPE
BUILDING:	33	10.3	NA
BUILDING SPRINKLER		N/A	
FIRM MAP NO:	48041C0215 E (Not located in 100 year floodplain or floodway)		

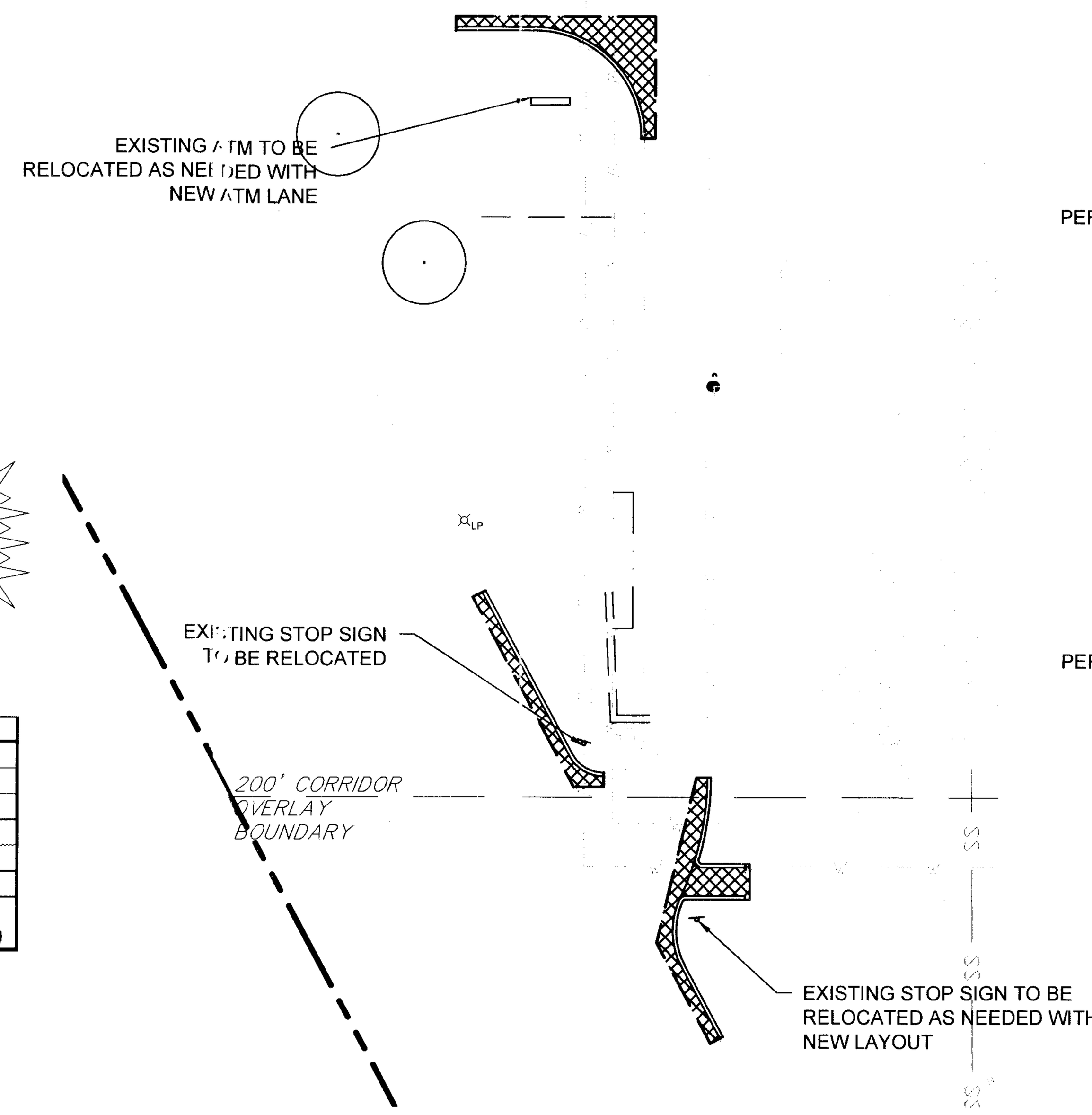

DEMOLITION PLAN

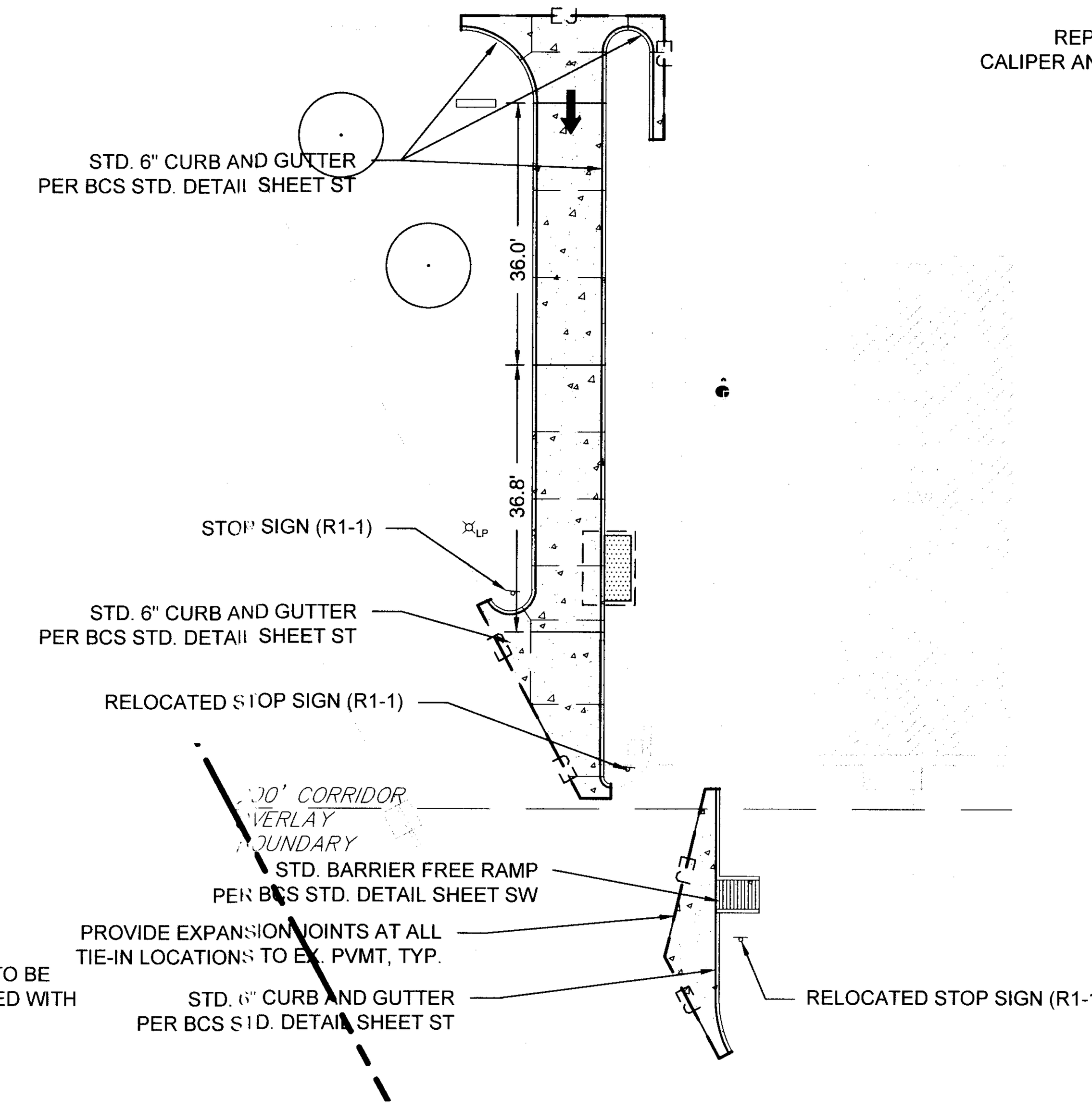

PAVING & JOINT PLAN

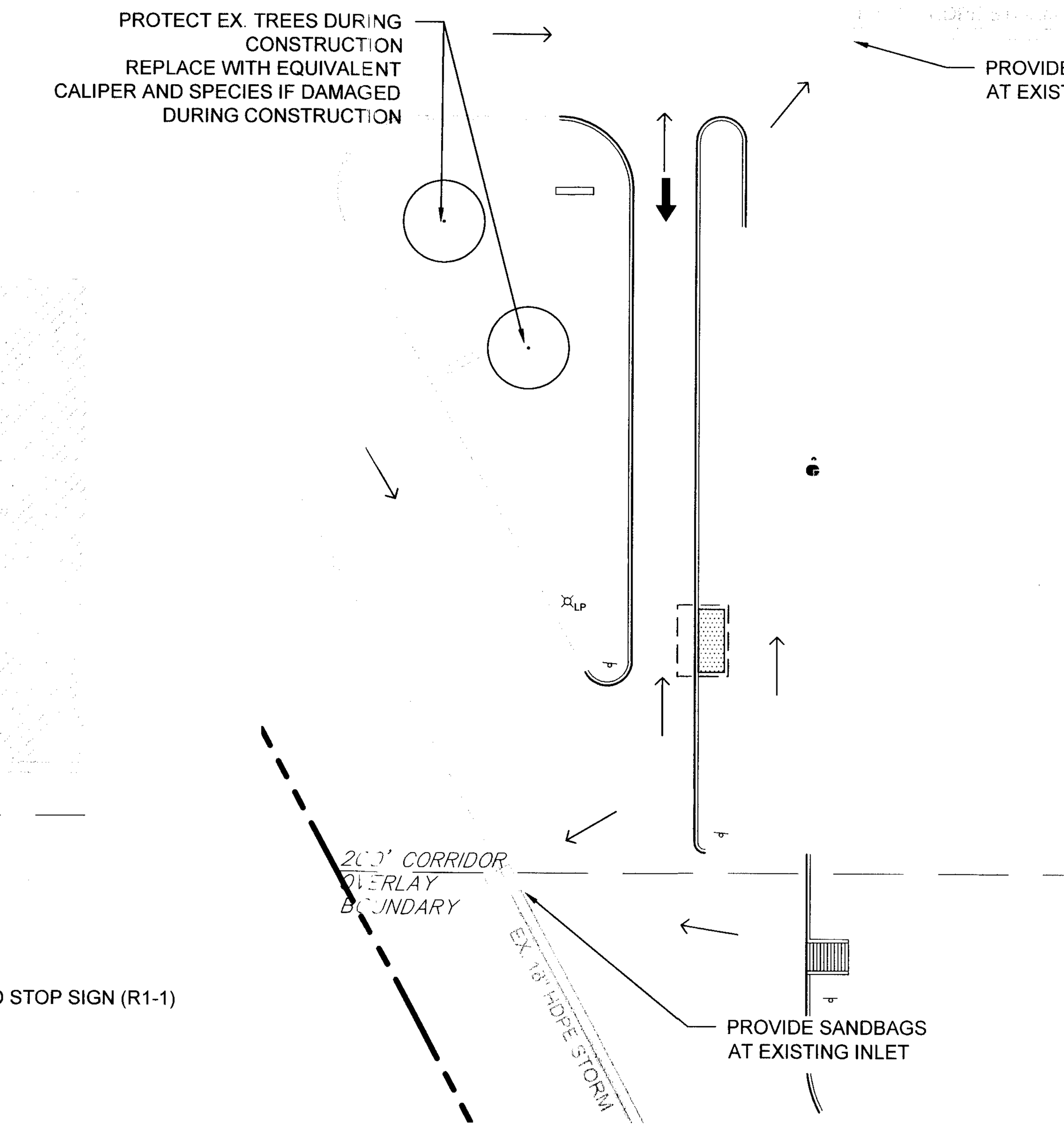

EROSION CONTROL PLAN

LOCATION MAP

NTS

EROSION CONTROL NOTES:

1. THE CONTRACTOR SHALL PROVIDE EROSION PROTECTION AT ALL LOCATIONS OF CONSTRUCTION.
2. THE CONTRACTOR WILL REMOVE ALL EXCESS SOIL FROM CONSTRUCTION VEHICLES PRIOR TO EXITING THE SITE.
3. THE CONTRACTOR SHALL UNDERTAKE PROPER METHODS TO REDUCE DUST GENERATION FROM THE SITE.
4. THE CONTRACTOR MUST COMPLY WITH FEDERAL, STATE, AND LOCAL REGULATIONS REGARDING SEDIMENTS AND EROSION CONTROL.
5. A COPY OF THIS PLAN MUST BE KEPT AT THE CONSTRUCTION FACILITY DURING THE ENTIRE CONSTRUCTION PERIOD.
6. ALL FINISHED GRADES ARE TO BE HYDRO-MULCHED, SPOT SODDED OR SEEDED AND WATERED UNTIL GROWTH IS ESTABLISHED.

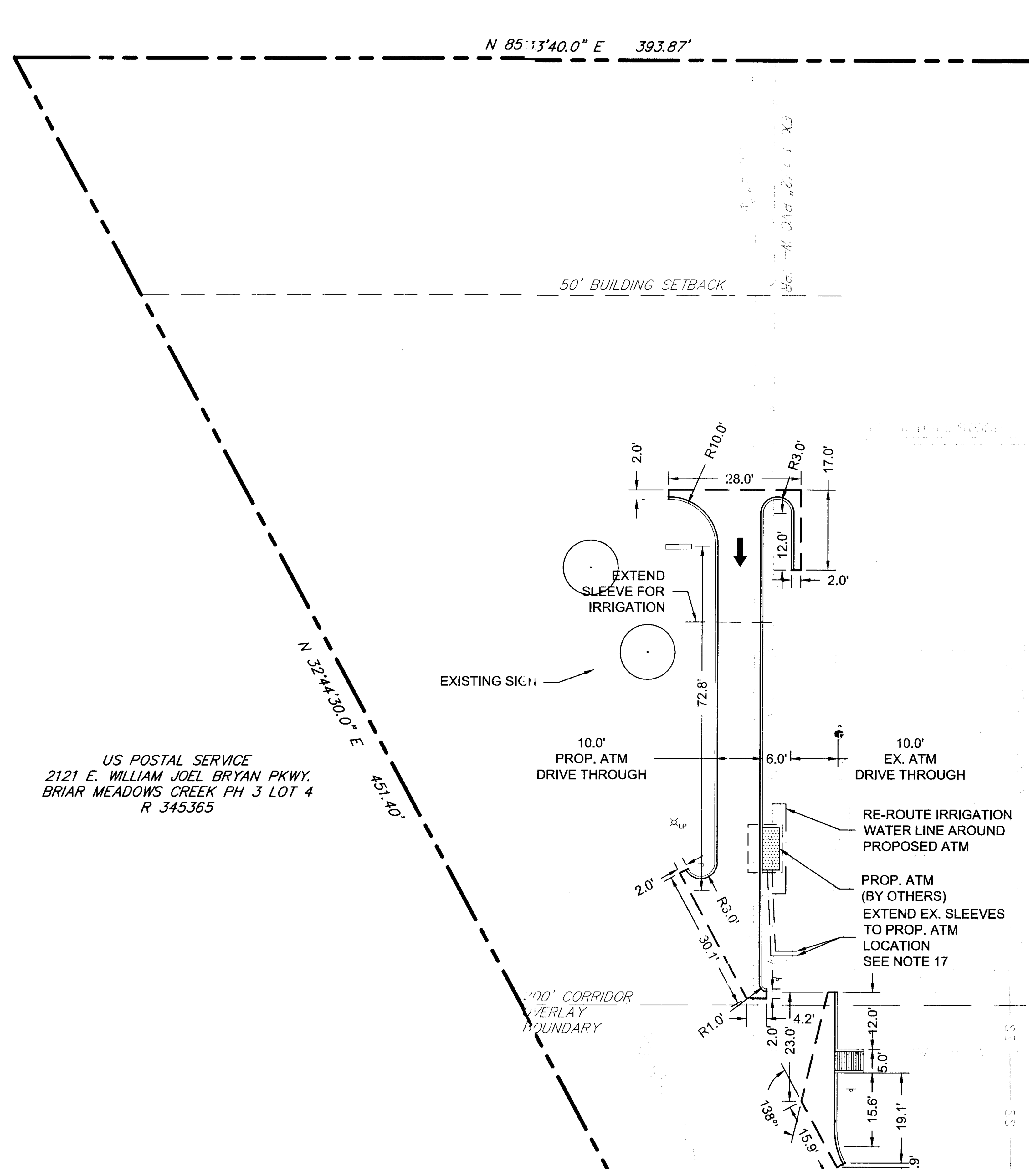

SITE PLAN NOTES:

1. CONTRACTOR SHALL NOTIFY THE ENGINEER OF ANY DISCREPANCIES BETWEEN THESE PLANS AND ONSITE FIELD CONDITIONS OR SPECIFICATIONS OF OTHER DISCIPLINES
2. THE CONTRACTOR IS REQUIRED TO OBTAIN ALL NECESSARY PERMITS, AS WELL AS INSPECTION APPROVALS.
3. A COPY OF APPROVED CONSTRUCTION PLANS SHALL BE KEPT ON SITE AT ALL TIMES THROUGHOUT CONSTRUCTION. THE CONTRACTOR SHALL MAINTAIN A SET OF REDLINE DRAWINGS TO RECORD AS-BUILT CONDITIONS.
4. REFER TO ATM PLANS FOR COMPLETE UNIT DIMENSIONS.
5. REF. ATM PLANS FOR PROPOSED SITE SIGNAGE AS APPLICABLE.
6. THE CONTRACTOR SHALL BE RESPONSIBLE FOR THE CONTAINMENT AND PROPER DISPOSAL OF ALL LIQUID AND SOLID WASTE ASSOCIATED WITH THIS PROJECT. THE CONTRACTOR SHALL USE ALL MEANS NECESSARY TO PREVENT THE OCCURRENCE OF WIND BLOWN LITTER FROM THE PROJECT SITE.
7. DURING CONSTRUCTION, THE CONTRACTOR SHALL MAINTAIN AN ORDERLY PROJECT SITE. THE CONTRACTOR SHALL CLEAN AND REMOVE ANY SURPLUS OR DISCARDED MATERIALS, TEMPORARY STRUCTURES, AND DEBRIS FROM THE PROJECT SITE.
8. THE CONTRACTOR IS RESPONSIBLE FOR STORAGE AND SAFE-GUARDING OF ALL MATERIALS AND EQUIPMENT AT THE PROJECT SITE TO MAINTAIN A SAFE AND SECURE PROJECT.
9. THE CONTRACTOR SHALL COORDINATE SITE STORAGE WITH THE OWNER TO NOT OBSTRUCT DRIVES, ACCESS, OR OTHER OPERATIONAL REQUIREMENTS.
10. ANY ADJACENT RIGHT-OF-WAY (R.O.W.) OR PROPERTY AFFECTED DURING CONSTRUCTION, SHALL BE RETURNED TO PRE-CONSTRUCTION CONDITION AT THE CONTRACTOR'S EXPENSE.
11. THE CONTRACTOR SHALL PROTECT ALL SURVEY MONUMENTATION, BENCHMARKS, AND MARKERS DURING CONSTRUCTION.
12. THE CONTRACTOR MUST PROVIDE CONSTRUCTION STAKING SERVICES BASED ON THE INFORMATION PROVIDED IN THE PLANS.
13. 100% COVERAGE OF GROUNDCOVER, DECORATIVE PAVING, DECORATIVE ROCK, OR A PERENNIAL GRASS IS REQUIRED IN PARKING LOT ISLANDS. SWALES AND DRAINAGE AREA, THE PARKING LOT SETBACK, RIGHTS-OF-WAY, AND ADJACENT PROPERTY DISTURBED DURING CONSTRUCTION.
14. THE CONTRACTOR SHALL BE RESPONSIBLE FOR THE PROTECTION OF ALL EXISTING UTILITIES OR SERVICE LINES DURING THE CONSTRUCTION PROCESS. WHERE EXISTING UTILITIES OR SERVICE LINES ARE DAMAGED, THE CONTRACTOR SHALL REPAIR OR REPLACE THE UTILITY OR SERVICE LINE WITH THE SAME TYPE OF MATERIAL AND CONSTRUCTION, OR BETTER. ALL MATERIAL AND LABOR SHALL BE AT THE CONTRACTOR'S EXPENSE.
15. THE CONTRACTOR ACKNOWLEDGES THAT THE LOCATION AND/OR ELEVATION OF THE EXISTING UTILITIES SHOWN ON THE PLANS IS BASED ON RECORDS OF VARIOUS UTILITY COMPANIES, CITY MAPS AND, WHEN POSSIBLE, FIELD MEASUREMENTS. THE INFORMATION IS NOT TO BE RELIED UPON AS BEING EXACT OR COMPLETE.
16. THE CONTRACTOR SHALL NOTIFY THE APPROPRIATE UTILITY COMPANY 48 HOURS PRIOR TO EXCAVATION, AND SHALL NOTIFY THE ENGINEER OF ANY CONFLICTS.
17. PROVIDE 2- 120 V CIRCUITS PER DIEBOLD ATM AND KIOSK MANUFACTURER'S REQUIREMENTS. SEE DIEBOLD CUT SHEETS (ATTACHED AS SHEET C1.0) FOR ADDITIONAL DATA, ELECTRICAL, VIDEO, ETC. REQUIREMENTS.

PAVEMENT NOTES:

1) SUBGRADE:
   A. EXISTING TREES, STUMPS, AND ROOTS SHALL BE GRUBBED AND REMOVED. VEGETATION SHALL BE REMOVED AND THE TOP 6" OF TOPSOIL AND SUBGRADE STRIPPED FROM THE AREAS TO BE COVERED BY PROPOSED IMPROVEMENTS.
   B. PAVING AREAS SHALL BE PROOFROLLED WITH A 15 TON COMPACTOR AND, IF REQUIRED AT THE TIME OF CONSTRUCTION , THE CONTRACTOR SHALL STABILIZE WEAK AREAS BY OVER EXCAVATING AND BACKFILLING.
   C. FILL MATERIAL SHALL BE PLACED IN 8" LOOSE LIFTS, MAXIMUM, WITH EACH LIFT AT A MOISTURE CONTENT OF +/- 2% OF OPTIMUM, AND COMPACTED TO A UNIFORM DENSITY OF 95% OF THE MAXIMUM DRY DENSITY AS DETERMINED BY THE STANDARD PROCTOR (ASTM D698).
   D. COMPACTION TESTS SHALL BE CONDUCTED FOR EVERY 4,000 SF OF FILL PLACED, WITH A MINIMUM OF ONE TEST PER LIFT.
2) CONCRETE PAVEMENT:
   A. CONCRETE SHALL HAVE A MINIMUM 28-DAY COMPRESSIVE STRENGTH OF 4,000 PSI.
   B. ALL CONCRETE SHALL BE VIBRATED WHEN PLACED.
   C. PAVEMENT CONTRACTION JOINTS SHALL BE INSTALLED PER DETAIL (THIS SHEET), WITH A MAXIMUM SPACING OF 12' FOR 6" PAVEMENT. CONTRACTION JOINTS SHALL BE INSTALLED BETWEEN 2 AND 6 HOURS OF CONCRETE PLACEMENT AS CONCRETE CURING ALLOWS. AN EARLY ENTRY SAW IS PREFERRED.
   D. PAVEMENT EXPANSION JOINTS SHALL BE SPACED AS SHOWN ON THE PLANS AND INSTALLED PER DETAIL (THIS SHEET). CONSTRUCTION SHALL BE STOPPED AT EXPANSION JOINTS. IF CONDITIONS REQUIRE, CONSTRUCTION TO BE STOPPED AT OTHER LOCATIONS, A COLD JOINT SHALL BE CONSTRUCTED.
   E. ISOLATION JOINTS SHALL BE PLACED AT ALL IN-PAVEMENT OBJECTS INCLUDING INLETS, LIGHT POLE FOOTINGS AND CLEANOUTS.
   F. ALL JOINTS SHALL BE SEALED PER DETAIL (THIS SHEET).
   G. TRANSPORTATION AND PLACEMENT OF THE CONCRETE SHALL BE IN ACCORDANCE WITH ACI 301. A TEST SET CONSISTING OF 3 CYLINDERS SHALL BE TAKEN EVERY 75 CUBIC YARDS OF CONCRETE.
3) REINFORCING STEEL:
   A) ALL REINFORCEMENT SHALL BE ASTM A-615, GRADE 60. THE PAVEMENT REINFORCEMENT SHALL BE #4 BARS, 16" OCEW.
   B) LAPS AND SPLICES IN REINFORCING BARS SHALL BE A MINIMUM OF 30 BAR DIAMETERS IN LENGTH. BARS SHALL BE SECURED AT EVERY OTHER INTERSECTION.

NOTE: CONCRETE SHALL HAVE A MINIMUM 28-DAY COMPRESSIVE STRENGTH OF4,000 psi

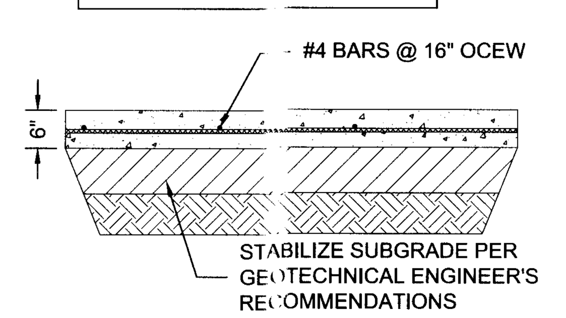

6" THICK CONCRETE PAVEMENT

NTS

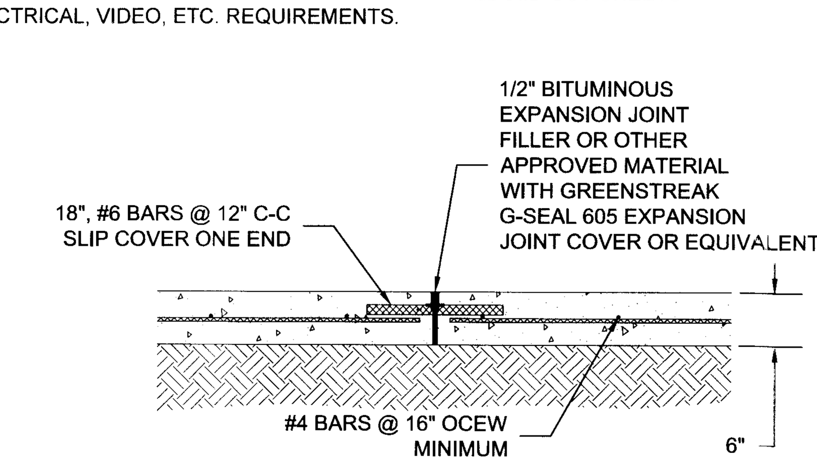

EXPANSION JOINT

NTS

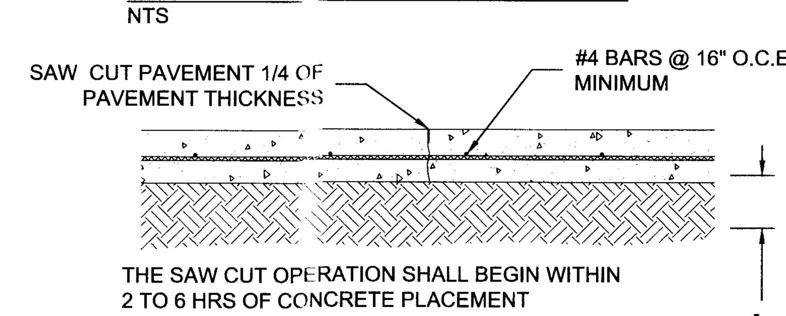

THE SAW CUT OPERATION SHALL BEGIN WITHIN 2 TO 6 HRS OF CONCRETE PLACEMENT

CONTROL JOINT

NTS

NOTES:
1. ISOLATION JOINTS SHALL BE PLACED AS SHOWN ON THE JOINT PLAN
   a. AT INTERSECTIONS
   b. AT SMALL IN-PAVEMENT OBJECTS
3. BOX OUT INLETS AND MANHOLES

LEGEND:

(dotted box)	PROPOSED ATM
— — —	PROPERTY LINE
	EXISTING PAVEMENT EDGE
— — —	FIRELANE (RED CURB WITH 4" WHITE LETTERS: "FIRELANE NO PARKING TOW-AWAY ZONE")
— — 340 — —	EXISTING MAJOR CONTOURS
— — 341 — —	EXISTING MINOR CONTOURS
——340——	PROPOSED MAJOR CONTOURS
——341——	PROPOSED MINOR CONTOURS
	EXISTING WATER LINE
	EXISTING SANITARY SEWER
(box)	PROPOSED 6" 4,000 PSI CONCRETE PAVEMENT
— — — —	CONTRACTION JOINT (MAX 12' SPACING)
— EJ — EJ —	EXPANSION JOINT
—SCF—	SILT FENCE
←	DIRECTION OF FLOW ARROW

SITE PLAN FOR:

ADDITIONAL ATM LANE AGGIELAND CREDIT UNION

2127 E. WILLIAM JOEL BRYAN PKWY.
BRYAN, TEXAS

R113583
PENNER PLACE, BLOCK 1, LOT 2
2.62 TOTAL ACRES
ZONING: C-3 COMMERCIAL

OWNER:
AGGIELAND CREDIT UNION
P.O. BOX 10091
COLLEGE STATION, TEXAS 77842
TELEPHONE: 979-694-3759
CONTACT: JASON GOODMAN
EMAIL: JASON.GOODMAN@AGGIELANDCU.ORG

APR 03 2013

STATE OF TEXAS
MELISSA THOMAS
98598
LICENSED PROFESSIONAL ENGINEER
PRELIMINARY

APRIL 3, 2013
JOB NO. 13-0139

PREPARED BY:

Gessner Engineering
2501 Ashford Drive, Ste 102
College Station, Texas 77840
P.O. Box 10763, 77842-0763
979.680.8840 (Phone)
979.680.8841 (Fax)
www.gessnerengineering.com
Firm Registration Number: F-7451

L6