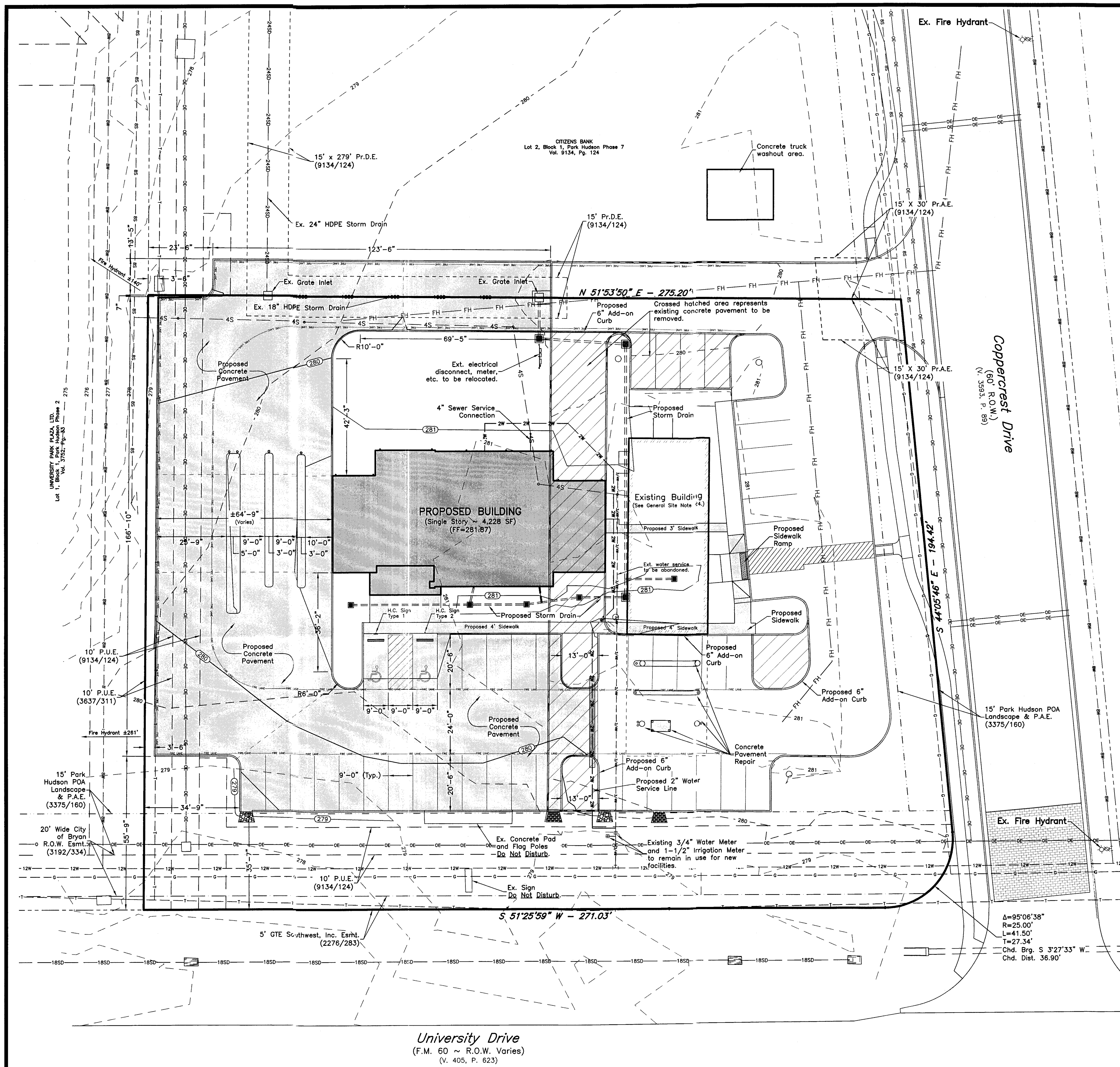

SITE PLAN

SCALE: Hor: 1" = 20'
Vert: 1" = 1'

GENERAL CONSTRUCTION NOTES:

1. It shall be the responsibility of the Contractor to verify the exact location of all existing underground utilities. Furthermore, the Contractor shall contact all utility company representatives a minimum of 48 hours in advance of any excavation.

   Contact Dig Tess @ 1-800-344-8377

2. Location of existing buried utilities, where shown, is approximated only. Other utilities may be present that are not shown on the Construction Drawings. The Contractor shall be responsible for locating and protecting all buried utilities.
3. Unless otherwise indicated, all construction shall be in accordance with the current City of Bryan Standard Details, Specifications, and B/CS Design Guidelines for Water, Sewer, Drainage and Street Construction. All inspection of public infrastructure shall be coordinated with the staff of the City Engineer of Bryan. It is the intent of these plans to comply with all City of Bryan Guidelines, Details, and Specifications.
4. In lieu of using the construction materials indicated in these plans, the Contractor shall obtain written approval from the Owner for any substitution.
5. The Contractor is responsible for all construction safety. Construction Drawings do not include necessary components for construction safety.
6. It is the responsibility of the contractor to comply with all State and Federal Regulations regarding construction activities near energized overhead or underground power lines. Additionally, the contractor shall coordinate all proposed work and procedures with Bryan Texas Utilities (BTU).
7. Trenches may be left open overnight if properly covered or barricaded to prevent pedestrian and vehicular access.
8. Contractor to provide Traffic Control Plan.
9. Traffic Signs, roadway signs, and other traffic control devices are not included in these plans.
10. The Contractor shall be responsible for all storm water pollution prevention associated with this project. The Contractor shall use all means necessary to prevent the transportation of sediment from the project site. The Contractor shall comply with TCEQ – TPDES storm water requirements.
11. All soil not used as part of this project shall become the property of the Contractor. The Contractor shall be responsible for the disposal of the material off-site.
12. All soil disturbed by construction that is not landscaped shall be hydromulch seeded as soon as grading is complete. All slopes equal to or greater than 4:1 that will not be landscaped (i.e. covered with sod or plants) shall be hydromulch seeded and covered with erosion control blanket. The erosion control blanket shall be S75 Single Net Straw Blanket as manufactured by North American Green.
13. Contractor shall provide a proposed expansion/contraction joint layout for the Engineer's review and approval prior to constructing driveways and parking lot areas.
14. For quantities, see the following sheet:
   A. See Sheet C1.2 for demolition quantities.
   B. See Sheet C2.1 for erosion control quantities.
   C. See Sheet C3.1 for paving/sidewalk quantities
   D. See Sheet C4.1 for utility improvements quantities.

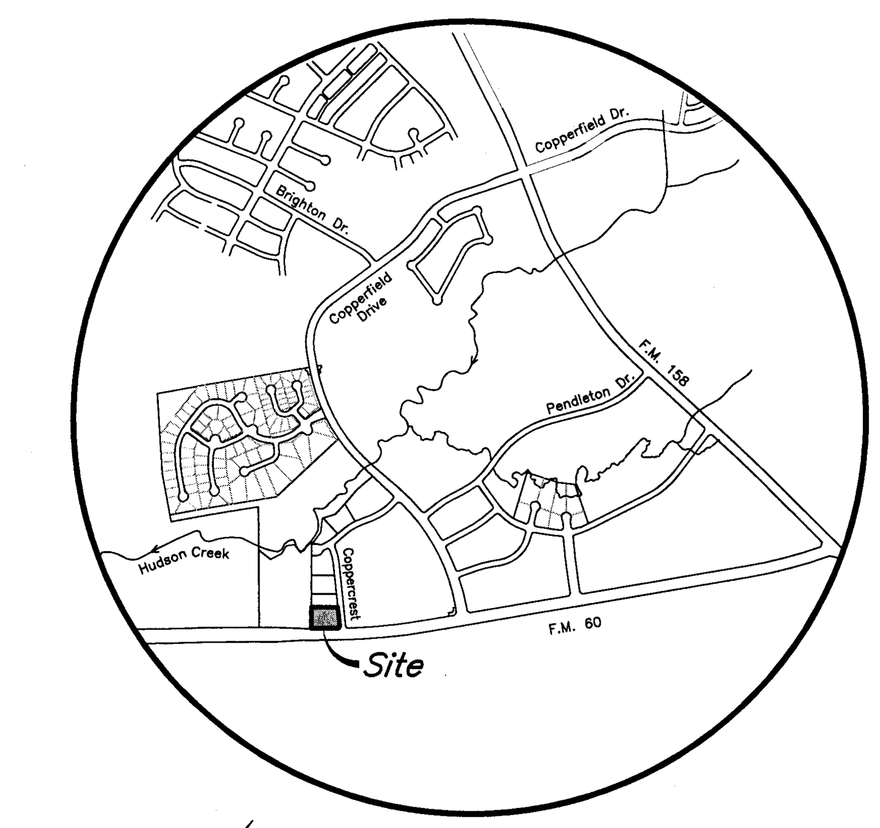

Vicinity Map
N.T.S.

GENERAL SITE NOTES:

1. This property is currently zoned Planned Development – Mixed Use (PD-M).
2. Owner & Applicant:
   Citizens Bank
   P.O. Box 1700
   Kilgore, TX 75663-1700
   (903) 988-3456
3. Proposed Use: Commercial
   Gross Square Footage: 4,228 SF
   BUILDING IS NOT SPRINKLED
4. Parking Analysis:
   Parking Spaces Required = 4,228 SF / (250 SF per 1 Parking Space) = 17 Spaces
   Parking Spaces Provided = 45 Spaces (includes 2 handicapped accessible spaces)
5. WATER AND SANITARY SEWER DEMANDS:
   Water Demands: Max.= 10 GPM Avg.= 3 GPM Min.= 0 GPM
   Irrigation: Max.= 20 GPM
   Sewer Demands: 400 GPD (Max.)
6. According to the Flood Insurance Rate Maps for Brazos County, Texas and Incorporated Areas, Map Number 48041C0220F, revised May 16, 2012 this property is not located within a FEMA 100-year flood hazard area.
7. Contour Information has been prepared from an actual on-the-ground survey.
8. Electric service to be provided by Bryan Texas Utilities.
9. In accordance with the Hudson Creek Drainage Analysis dated July 1999, no detention is required for areas between Carters Creek and F.M. 158 as long as the proposed site does not exceed 80% impervious cover. This development is only 36% impervious. Therefore, stormwater detention is not required for this site
10. See Site Civil Engineering Drawings for additional utility, grading, and layout information.
11. All Fire Lanes shall be designated by painting the curbs. Fire lanes to be constructed using the "Fire Apparatus Turning Radius Template" and have a fire lane sign at the entrance. The curbs shall be painted red with four inch (4") white lettering stating "No Parking Fire Lane Tow Away Zone". Wording may not be spaced more than fifteen feet (15') apart.
12. Irrigation system to be installed by others. Refer to the Landscaping Plan for additional information regarding the irrigation system. The irrigation system must be approved by the City and installed by a certified installer prior to issue of Certificated of Occupancy.
13. No combustibles will be allowed on site until all-weather roads and fire hydrants have been accepted by the City.
14. The Contractor shall install all TAS/ADA related items in accordance with the current TAS/ADA requirements.
15. Demolition/Construction Waste – The Contractor shall be responsible for providing containment for waste prior to and during demolition/construction. Solid waste roll off boxes and/or metal dumpsters shall be supplied by City of City Permitted contractor only. The Contractor shall use all means necessary to prevent the occurrence of wind blown litter from the project site.
16. Type of waste streams generated from this site: Normal Domestic Wastewater.
17. This bank building will utilize a roll-out container for solid waste services.
18. See Landscaping Plans for proposed landscaping.
19. All dimensions are marked from back of curb, unless noted otherwise.
20. All curb radius from back of curb are 4', unless noted otherwise.
21. All Concrete Pavement shall be 6" thick with #4 at 18" CC,EW. All pavement shall be placed over 6" stabilized subgrade. Refer to Geotechnical Report prepared by CSC Engineering & Environmental Consultants, Inc., CSC Project Number 9066-34.
22. All concrete shall be 4,000 p.s.i. for pavement and 3,000 p.s.i. for sidewalks.
23. All reinforcement shall be Grade 60, unless noted otherwise.
24. The existing building and facilities shall remain in service until new building can be occupied and placed into service. The existing building and facilities to be decommissioned as per the Contract Documents.

Legend

Symbol	Description
— 8S —	Existing Sewer Line/Serivce w/ size
— 8W —	Existing Water Line w/ size
— 18SD —	Existing Storm Drain w/ size
— G —	Existing Gas Line
— OE —	Overhead Electrical Line
— UE —	Existing Underground Electric Line
— T —	Existing Underground Telephone Line
— 2W —	Proposed Water Service w/size
— FH —	Proposed Fire Hose Lay
	Boundary Line
	Existing Easement Line
	Property Line
	Proposed Easement Line
(288)	Proposed Contour Line (1' Interval)
283	Existing Contour Line (1' Interval)
	Existing Sewer Manhole
	Existing Fire Hydrant
	Existing Gate Valve
	Existing Sprinkler Head
	Existing Sign
	Existing Underground Electric Box
	Existing Telephone Box
	Existing Water Meter(s)
	Proposed Traffic Flow Arrow

Abbreviations

P.A.E. – Public Access Easement
Pr.A.E. – Private Access Easement
P.D.E. – Public Drainage Easement
Pr.D.E. – Private Drainage Easement
P.U.E. – Public Utility Easement
Ls.E. – Landscape Easement

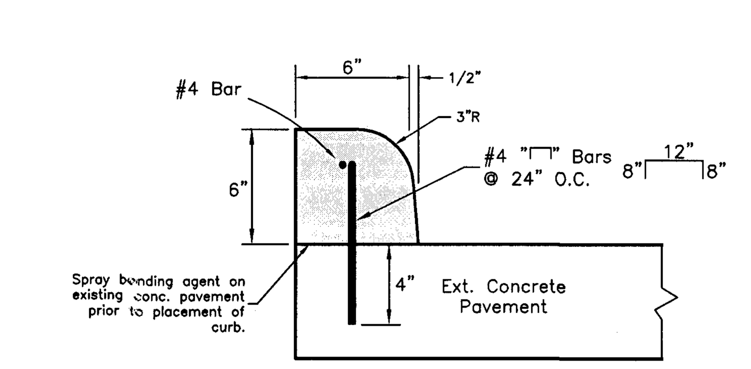

TYPICAL 6" ADD-ON CURB
SCALE: N.T.S.

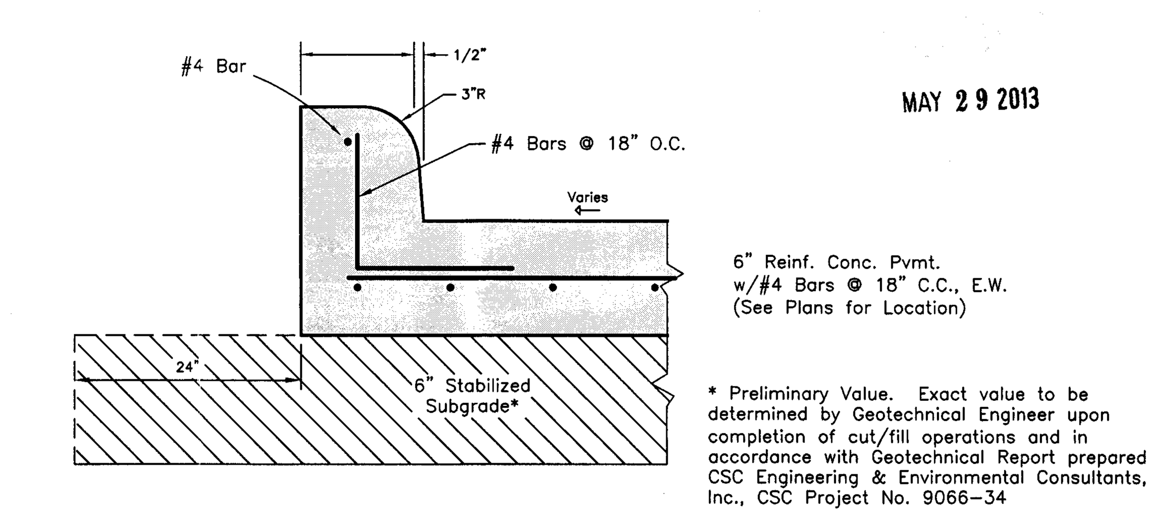

6" Reinf. Conc. Pvmt.
w/#4 Bars @ 18" C.C., E.W.
(See Plans for Location)

* Preliminary Value. Exact value to be determined by Geotechnical Engineer upon completion of cut/fill operations and in accordance with Geotechnical Report prepared by CSC Engineering & Environmental Consultants, Inc., CSC Project No. 9066-34

TYPICAL 6" CURB & PAVEMENT DETAIL
SCALE: N.T.S.

MAY 29 2013

For Interim Review Only
These documents have been released on May 13, 2013 for the purpose of review and comment under the authority of: J. Dale Browne, Jr. P.E., P.E. No. 81890
They are not to be used for construction purposes.

ISSUED FOR REVIEW AND COMMENT.

DATE: FEBUARY 2012
DRAWN BY: CLH
DESIGNED BY: CLH
CHECKED BY: JDB
10030005-001-C1.1

REVISIONS

McCLURE & BROWNE ENGINEERING/SURVEYING, INC.
Engineer Reg. No. F-458 · Survey Reg. No. 101033-00
1008 Woodcreek Dr., Suite 103
College Station, Tx. 77845 · (979) 693-3838
1314 10th Street, Suite 210
Huntsville, Tx. 77320 · (936) 294-9749

Site Plan
Citizens Bank
Lot 1, Block 1, Park Hudson Phase 7
Volume 9134, Page 124, 1.458 Acres

Citizens Bank, Phase 2

SHEET NO.
C1.1